NICOMATIC

CREATIVE
INTERCONNECT
SOLUTIONS

CMM

MIL55302 SPECIFICATIONS

MODULAR CONNECTOR

SUB-D TYPE

– *HARSH ENVIRONMENT*

2mm pitch

CMM Series Micro-connectors

NICOMATIC specializes in the design, development and manufacture of electronic connectors.

The **CMM MICRO CONNECTOR** interconnection system is a 2mm pitch connector (square matrix) with proven **high reliability under the most extreme environmental conditions:**

- Flexible architecture: "Board to Board", "Board toWire" and "Wire toWire" configurations
- Modular and hybrid design: mixed layout full option with Low Frequency – LF (over 5 Amp) – and High Frequency – HF - (over 11 GHz) and High Power - HP - (over 30 Amp)
- High reliability contact design & High performance under harsh use conditions
- Secure: integral jacking mechanism or locking by spring latch

The CMM MICRO CONNECTOR is a complete and standard range of connectors:

- CMM 100 series: 1 row – from 2 to 25 LF contacts
- CMM 200 series: 2 rows – from 4 to 50 LF contacts
- CMM 220 series: 2 rows – from 4 to 60 LF contacts, or up to 15 HF or HP contacts (series 30)
- CMM 320 series: 3 rows – from 6 to 120 LF contacts, or up to 20 HF or HP contacts (series 30)
- CMM 340 series: 3 rows – min. 6 LF contacts and up to 64 HF or HP contacts (series 22)

Direct benefits:

- Space saving: - 40% in surface and over - 60% in volume
- Weight saving: - 20 to - 50% vs. usual solution for same functionalities
- Reduce number of connectors: 2 or 3 connectors in 1 thanks to a modular concept
- Cost effective solution: custom connector assembly from standard components
- Proven success stories in on-board electronic systems
- Full traceability with EN9100:2003
- **Short lead time: 1 week express service**, Premium service, Fast sampling and prototyping
- **Online services** (www.nicomatic.com): Free use of My Niomatic service (2D & 3D drawings), automatic part number & mating-half configurators, technical support .

The CMM has been developed for the aerospace, avionics, instrumentation & control, defence and transportation markets, with applications that include IFES, HUDs, flight controls, FADEC units, radars, missiles, electro-optical sighting systems, satellites, mobile radios, power supplies, UAVs and engine controls. It is also used in a growing number of medical, and telecom applications.

Dimension Tables

CMM 100/200 SERIES in male & female styles for LF contacts

CMM SERIES 100 & 200 Male	LF contacts number series 100		2	3	4	5	6	7	8	9	10	11	12	13	14	15	16	17	18	19	20	21	22	23	24	25
	LF contacts number series 200		4	6	8	10	12	14	16	18	20	22	24	26	28	30	32	34	36	38	40	42	44	46	48	50
	Length in mm	A	2	4	6	8	10	12	14	16	18	20	22	24	26	28	30	32	34	36	38	40	42	44	46	48
	Length in mm (Strap)	B	6,7	8,7	10,7	12,7	14,7	16,7	18,7	20,7	22,7	24,7	26,7	28,7	30,7	32,7	34,7	36,7	38,7	40,7	42,7	44,7	46,7	48,7	50,7	52,7
	Length in mm	C	7,4	9,4	11,4	13,4	15,4	17,4	19,4	21,4	23,4	25,4	27,4	29,4	31,4	33,4	35,4	37,4	39,4	41,4	43,4	45,4	47,4	49,4	51,4	53,4
	Length C with Latches fitted		7,8	9,8	11,8	13,8	15,8	17,8	19,8	21,8	23,8	25,8	27,8	29,8	31,8	33,8	35,8	37,8	39,8	41,8	43,8	45,8	47,8	49,8	51,8	53,8

CMM SERIES 100 & 200 Female	LF contacts number series 100		2	3	4	5	6	7	8	9	10	11	12	13	14	15	16	17	18	19	20	21	22	23	24	25
	LF contacts number series 200		4	6	8	10	12	14	16	18	20	22	24	26	28	30	32	34	36	38	40	42	44	46	48	50
	Length in mm	A	2	4	6	8	10	12	14	16	18	20	22	24	26	28	30	32	34	36	38	40	42	44	46	48
	Length in mm	B	7	9	11	13	15	17	19	21	23	25	27	29	31	33	35	37	39	41	43	45	47	49	51	53

LF CONTACTS REFERENCE MARK NUMBER FOR CMM SERIES 200 Male & Female	D	1	1	1	1	1	1	1	1	1	1	1	1	1	1	1	1	1	1	1	1	1	1	1	1	1
	E	2	3	4	5	6	7	8	9	10	11	12	13	14	15	16	17	18	19	20	21	22	23	24	25	
	F	3	4	5	6	7	8	9	10	11	12	13	14	15	16	17	18	19	20	21	22	23	24	25	26	
	G	4	6	8	10	12	14	16	18	20	22	24	26	28	30	32	34	36	38	40	42	44	46	48	50	

CMM 220 SERIES in male & female styles for LF contacts

CMM SERIES 220 Male & Female	LF contacts number		4	6	8	10	12	14	16	18	20	22	24	26	28	30	32	34	36	38	40	42	44	46	48	50	52	54	56	58	60
	Distance between axis	A	2	4	6	8	10	12	14	16	18	20	22	24	26	28	30	32	34	36	38	40	42	44	46	48	50	52	54	56	58
		B	9	11	13	15	17	19	21	23	25	27	29	31	33	35	37	39	41	43	45	47	49	51	53	55	57	59	61	63	65
	Length in mm	C	14	16	18	20	22	24	26	28	30	32	34	36	38	40	42	44	46	48	50	52	54	56	58	60	62	64	66	68	70
	LF contacts reference mark number	D	1	1	1	1	1	1	1	1	1	1	1	1	1	1	1	1	1	1	1	1	1	1	1	1	1	1	1	1	1
		E	2	3	4	5	6	7	8	9	10	11	12	13	14	15	16	17	18	19	20	21	22	23	24	25	26	27	28	29	30
		F	3	4	5	6	7	8	9	10	11	12	13	14	15	16	17	18	19	20	21	22	23	24	25	26	27	28	29	30	31
		G	4	6	8	10	12	14	16	18	20	22	24	26	28	30	32	34	36	38	40	42	44	46	48	50	52	54	56	58	60

CMM 220 SERIES in male & female styles for HF/HP contacts

CMM 220 Male & Female Special contacts only	Special contacts number		2	3	4	5	6	7	8	9	10	11	12	13	14	15
	Distance between axis	A	4	8	12	16	20	24	28	32	36	40	44	48	52	56
		B	13	17	21	25	29	33	37	41	45	49	53	57	61	65
	Length in mm	C	18	22	26	30	34	38	42	46	50	54	58	62	66	70

CMM 320 SERIES in male & female styles for LF contacts

| | | | | | | | | | | | | | | | | | | |

CMM Specifications (with LF contacts)

MATERIALS

INSULATOR: Special PPS (Polyphenylene Sulfide Fiberglass filled thermoplastic) UL 94-V0

- Radiation resistance
- No humidity absorption
- Oxygen free

Note : PPS characteristics are recognized for space applications

P.C. LF CONTACTS :

Male:
Tail : copper alloy / Ni + Au flash 0,1µ
Contact area : copper alloy / Ni + Au > 1µ

Female:
Body : copper alloy / Ni + Au 0,2 µ
Socket : beryllium copper / Ni + Au > 1,25µ

CRIMP LF CONTACTS :

Male:
Body : copper alloy / Ni + Au > 1µ

Female:
Body : copper alloy / Ni + Au > 0,2 µ
Socket : beryllium copper / Ni + Au > 1,25µ

FIXING HARDWARE:

- Jackscrew: Stainless steel.
- Latch : Beryllium copper/plated nickel (CMM 100/200 series only)

ELECTRICAL

• All contacts	3 A max. @ 25°C 2.2 A max. @ 85°C
• Working voltage (sea level)	Tested at 800 V DC
• Proof voltage	Tested at 1 200 V DC
• Contact resistance (initially)	max. 10 mΩ
• Insulation resistance	1 000 MΩ min.

MECHANICAL

• Mechanical operations	Up to 2500 cycles
• Contact insertion and withdrawal force	2 N max. / 0.2 N min. per contact
• Contact retention in insulator	10 N min.
• Contact replacement in insulator	1-3 cycles (Crimp contacts only)

ENVIRONMENTAL

• Temperature cycling	From - 60°C to + 260°C **Reflow solder process compatible (+260°C)**
• Vibration severity	0.75 mm, 10 g RMS 6 hours long random with superimposed sinusoid. No intermittencies measured when using an H.S.L.I (High Speed Logic Interrupt) detector with a trip threshold of 2 ns. MIL-DTL-55302F Test Condition III [147.1 m/s2 (15 gn) peak]
• Shock severity	100 g for 6 ms
• Solvent resistance	

Note :
The CMM micro-connectors are designed to meet or exceed the relevant electrical and environmental performances described in MIL-DTL-55302F & BS-9525-F0033 standards.

HF / HP contacts specifications

MATERIALS

• **Spring loaded parts**	Be/Cu gold plated
• **Other metal parts**	Copper alloy
• **Insulator**	PTFE (HF)
• **Retaining clip**	Be/Cu Ni plated

MECHANICAL

• Mechanical operations	Up to 500 cycles
• Insertion force	From 0.60 to 5 N per contact
• Withdrawal force	From 0.50 to 2 N per contact
• Secure overlapping	1.30 mm
• Contact replacement in insulator	50 cycles for HF / HP 30 series (5 cycles for HF / HP 22 series)

ELECTRICAL

High Power (HP) Contact	Series 30	Series 22
Intensity per contact	35A	20A
Intensity per connector	20A	10A
Dielectric Voltage (seal level)		
Withstanding voltage Rated voltage	1500VRMS 500 VRMS	900VRMS 300 VRMS
High Altitude 70000ft :		
Withstanding voltage	360 VRMS	300 VRMS
Rated voltage	120 VRMS	100 VRMS
Contact resistance max. 3 mΩ		

High Frequency (HF) Contact

Impedance 50 Ω / 75Ω
Insulation resistance 10^6 MΩ
Insulation between 2 contacts -75 dB (depending on cable)
Withstanding voltage (sea level) 1000 VRMS
Rated voltage 80 v AC / 500 mA

Contacts HF on cable	**Series 30**	**Serie 22**
Frequency range up to	20 GHz	6 GHz

ENVIRONMENTAL

• Temperature cycling	From -60°C to +260°C
• Salt spray test	96 hrs *
• Humidity test	56 days @ 90% humidity

HF / HP CONTACTS PART NUMBERING

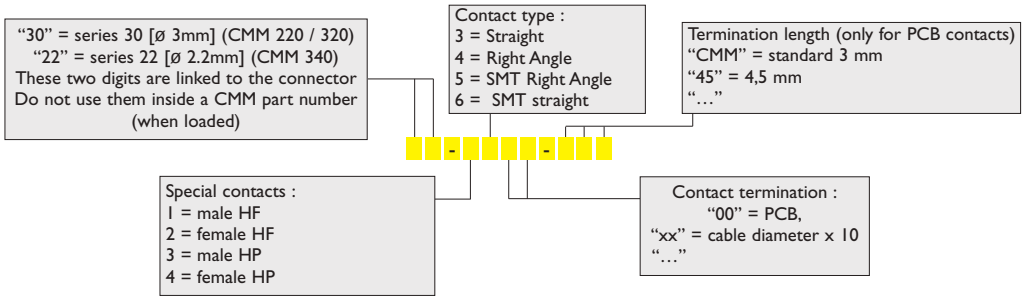

Important notice:

According to the routines test other than MIL our technical features for CMM Micro-connectors reach a higher result. For more information, please feel in the contact form on the website.
For example:
- Mechanical operations: up to 5 000 cycles
- High temperature test: 1 000H at 250°C
- Application with LVDS signal @ 400 MHz, impedance 100 Ohm
- High speed: USB, 1Gb/s Ethernet…

* without fixings

LF : low frequency contacts

PRESENTATION

	Straight PCB Type Y	90° PCB Type V	Straight SMT Type T	90° SMT Type R	Crimp Type S - C	Straight PCB Type PF Press fit
Male						
Female						

INFORMATION TABLE

CMM Range		Use												
		Straight on PCB						90° on PCB		Straight SMT		90° SMT	Crimp	
100/200	Male	Y L=3,0	YL L=4,5	YM L=5,1	YX L=9,1			V L=3,0	VL L=4,5	T L=2,25	TL L=3,35	R L=0,9	C Gauge 22	S Gauge 24-28
	Female	Y L=3,0	YL L=4,5			YC L=1,2	PF Press fit	V L=3,0	VL L=4,5	T L=2,25	TL L=3,35	R L=0,9	C Gauge 22	S Gauge 24-28
220	Male	Y L=3,0	YL L=4,5	YM L=5,1	YX L=9,1			V L=3,0	VL L=4,5	T L=2,25	TL L=3,35	R L=0,9	C Gauge 22	S Gauge 24-28
	Female	Y L=3,0	YL L=4,5			YC L=1,2	PF Press fit	V L=3,0	VL L=4,5	T L=2,25	TL L=3,35	R L=0,9	C Gauge 22	S Gauge 24-28
320	Male	Y L=3,0	YL L=4,5	YM L=5,1	YX L=9,1			V L=3,0	VL L=4,5			R L=0,9	C Gauge 22	S Gauge 24-28
	Female	Y L=3,0	YL L=4,5				PF Press fit	V L=3,0	VL L=4,5				C Gauge 22	S Gauge 24-28
340	Male	Y L=3,0	YL L=4,5	YM L=5,1	YX L=9,1			V L=3,0	VL L=4,5				C Gauge 22	S Gauge 24-28
	Female	Y L=3,0	YL L=4,5				PF Press fit	V L=3,0	VL L=4,5				C Gauge 22	S Gauge 24-28
		L=6,50 / 8,00 / 10,50 / 12,00 / 14,50 / 16,00 mm upon request (only for straight on PCB male contacts)												

Standard contact
Any other type of contact upon request only

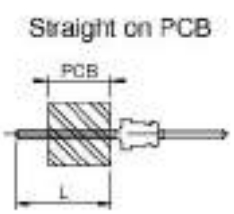

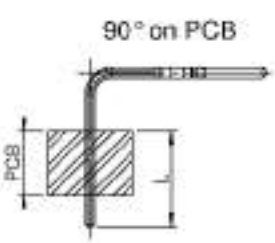

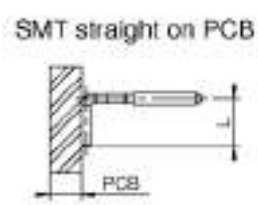

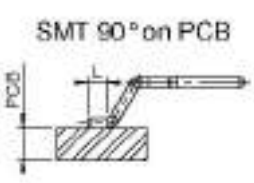

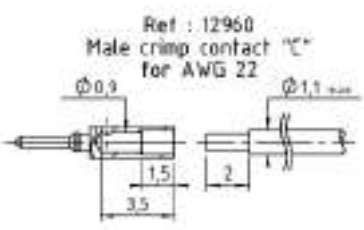

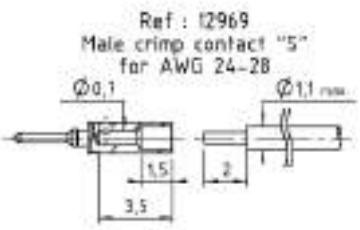

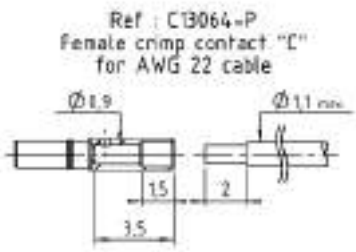

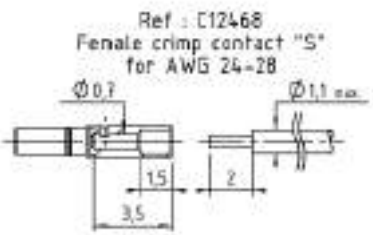

HF : high frequency contacts (series 30)

PRESENTATION

INFORMATION TABLE

CMM Range		Typical use: Type of contacts to be used in the CMM connector with cavities for HF/HP contacts only										
		Type D for special contacts on PCB (Eg.221D00F22-00 nbr of special contact-1300CMM)							Type E for special contacts on cable			
		Straight on PCB		90° on PCB		Straight SMT	90° SMT Card edge		Straight Crimp	90° Crimp	Straight solder	90° solder
100/200	Male											
	Female											
220	Male	30-1300-CMM L=3,0	30-1300-45 L=4,5	30-1400-CMM L=3,0	30-1400-45 L=4,5	30-1600	30-1500-CMM no LF contact	30-1500-12	30-13XX-SS 30-13XX-DS xx=cable type	30-14XX-ZS 30-14XX-DS xx=cable type	30-13XX-ZZ xx=cable type	30-14XX-ZZ xx=cable type
	Female	30-2300-CMM L=3,0	30-2300-45 L=4,5	30-2400-CMM L=3,0	30-2400-45 L=4,5	30-2600			30-23XX-SS 30-23XX-DS xx=cable type	30-24XX-ZS 30-24XX-DS xx=cable type	30-23XX-ZZ xx=cable type	30-24XX-ZZ xx=cable type
320	Male	30-1300-CMM L=3,0	30-1300-45 L=4,5	30-1400-CMM L=3,0	30-1400-45 L=4,5			30-1500-12	30-13XX-SS 30-13XX-DS xx=cable type	30-14XX-ZS 30-14XX-DS xx=cable type	30-13XX-ZZ xx=cable type	30-14XX-ZZ xx=cable type
	Female	30-2300-12 L=3,0	30-2300-14 L=4,5	30-2400-CMM L=3,0	30-2400-45 L=4,5				30-23XX-SS 30-23XX-DS xx=cable type	30-24XX-ZS 30-24XX-DS xx=cable type	30-23XX-ZZ xx=cable type	30-24XX-ZZ xx=cable type
340	Male											
	Female											

Standard contact
Any other type of contact upon request only

XX = 12, 20, 24, 26 Eg. 24 = cable Ø 2,4 XX = 20 or 26 for DS cable	XX = 47, 85 Eg. 47 for UT47 cable

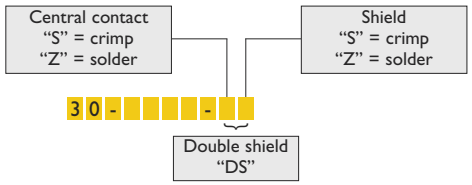

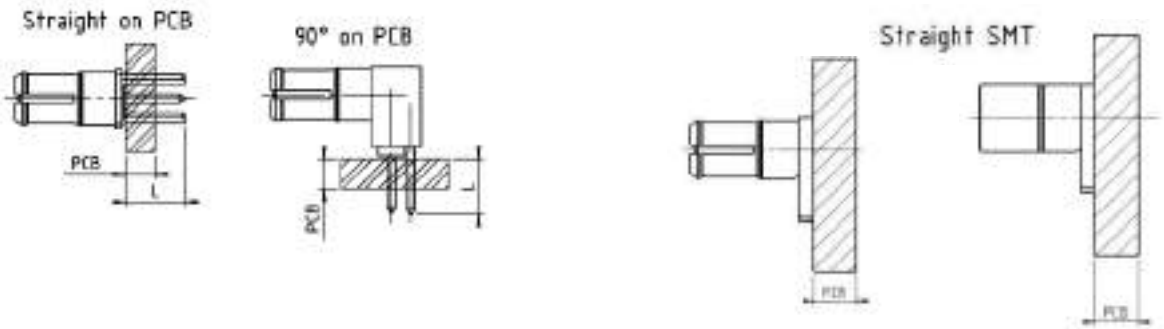

HP : high power contacts (series 30)

PRESENTATION

	Straight PCB	90° PCB	Straight SMT	90° SMT	90° SMT Card edge	Straight Crimp	90° Crimp	Straight solder	90° solder
Male									
Female									
	Type D					Type E			

INFORMATION TABLE

CMM Range		Typical use: Type of contacts to be used in the CMM connector with cavities for HF/HP contacts only											
		Type D for special contacts on PCB								Type E for special contacts on cable			
		Straight on PCB		90° on PCB		Straight SMT	90° SMT	90° SMT Card edge		Straight Crimp	90° Crimp	Straight solder	90° solder
100/200	Male												
	Female												
220	Male	30-3300-CMM L=3,0	30-3300-45 L=4,5	30-3400-CMM L=3,0	30-3400-45 L=4,5	30-3600	30-3500	30-3500-CMM no LF contact	30-3500-12	30-33XX		30-33XX	
	Female	30-4300-CMM L=3,0	30-4300-45 L=4,5	30-4400-CMM L=3,0	30-4400-45 L=4,5	30-4600	30-4500			30-43XX		30-43XX	
320	Male	30-3300-CMM L=3,0	30-3300-45 L=4,5	30-3400-CMM L=3,0	30-3400-45 L=4,5				30-3500-12	30-33XX		30-33XX	
	Female	30-4300-12 L=3,0	30-4300-14 L=4,5	30-4400-CMM L=3,0	30-4400-45 L=4,5					30-43XX		30-43XX	
340	Male												
	Female												

Standard contact
Any other type of contact upon request only

XX = 05, 08…
Eg. 08 for 8A

Please refer to page 94

Straight on PCB

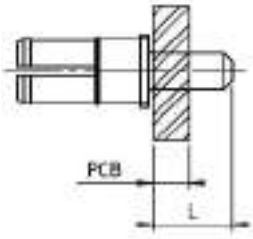

90° on PCB

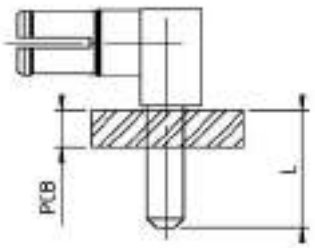

90° SMT

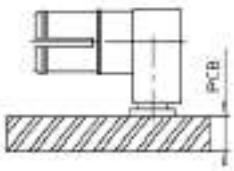

90° SMT Card edge (without LF contacts)

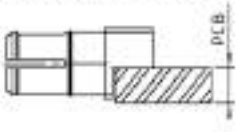

90° SMT Card edge (with LF contacts)

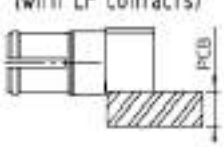

HF : high frequency contacts (series 22)

PRESENTATION

Male								
Female								
	Straight PCB	90° PCB	Straight SMT	90° SMT	Straight Crimp	90° Crimp	Straight solder	90° solder
	Type D				Type E			

INFORMATION TABLE

CMM Range		Typical use									
		Type of contacts to be used in the CMM connector with cavities for HF/HP contacts only									
		Type D for special contacts on PCB							Type E for special contacts on cable			
		Straight on PCB		90° on PCB		Straight SMT		90° SMT	Straight Crimp	90° Crimp	Straight solder	90° solder
100/200	Male											
	Female											
220	Male											
	Female											
320	Male											
	Female											
340	Male	22-1300-12 L=3,0	22-1300-14 L=4,5	22-1400-12* 22-1400-22** L=3,0	22-1400-14* 22-1400-24** L=4,5				22-1312-ZS		22-1320-ZZ	
	Female	22-2300-12 L=3,0	22-2300-14 L=4,5	22-2400-12* 22-2400-22** L=3,0	22-2400-14* 22-2400-24** L=4,5				22-2312-ZS		22-2320-ZZ	

Standard contact
Any other type of contact upon request only

12 = cable Ø 1,2

20 = cable Ø 2,0

* First row : 22-1400-12 / 22-1400-14 / 22-2400-12 / 22-2400-14
** Second row : 22-1400-22 / 22-1400-24 / 22-2400-22 / 22-2400-24

Straight on PCB

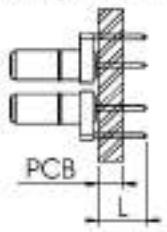

90° on PCB

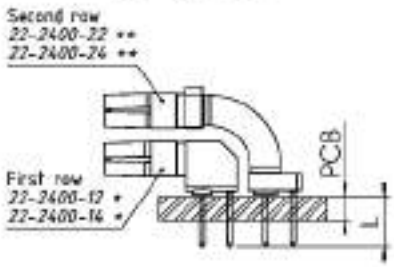

When a two-row connector mixes a 22-2400-12 and a 22-2400-22 contact, the P/N of the HF contact changes to 2400-02.

When a two-row connector mixes a 22-2400-14 and a 22-2400-24 contact, the P/N of the HF contact changes to 2400-04.

90° on PCB

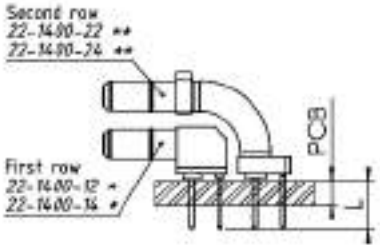

When a two-row connector mixes a 22-1400-12 and a 22-1400-22 contact, the P/N of the HF contact changes to 1400-02.

When a two-row connector mixes a 22-1400-14 and a 22-1400-24 contact, the P/N of the HF contact changes to 1400-04.

HP : high power contacts (series 22)

PRESENTATION

	Straight PCB	90° PCB	Straight SMT	90° SMT	Straight Crimp	90° Crimp	Straight solder	90° solder
Male								
Female								
	Type D				Type E			

INFORMATION TABLE

CMM Range		Typical use: Type of contacts to be used in the CMM connector with cavities for HF/HP contacts only											
		Type D for special contacts on PCB								Type E for special contacts on cable			
		Straight on PCB		90° on PCB		Straight SMT		90° SMT		Straight Crimp	90° Crimp	Straight solder	90° solder
100/200	Male												
	Female												
220	Male												
	Female												
320	Male												
	Female												
340	Male	22-3300-12 L=3,0	22-3300-14 L=4,5	22-3400-12* 22-3400-22** L=3,0	22-3400-14* 22-3400-24** L=4,5					22-33XX		22-33XX	
	Female	22-4300-12 L=3,0	22-4300-14 L=4,5	22-4400-12* 22-4400-22** L=3,0	22-4400-14* 22-4400-24** L=4,5					22-43XX		22-43XX	

Standard contact
Any other type of contact upon request only

XX = 05, 08, 10
10 = 10A

Please refer to page 102

* First row : 22-3400-12 / 22-3400-14 / 22-4400-12 / 22-4400-14
** Second row : 22-3400-22 / 22-3400-24 / 22-4400-22 / 22-4400-24

Straight on PCB

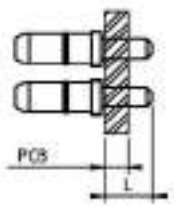

90° on PCB

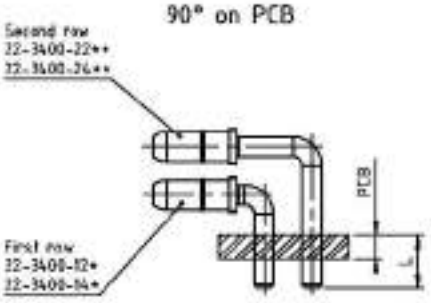

When a two-row connector mixes a 22-3400-12 and a 22-3400-22 contact, the P/N of the HF contact changes to 3400-02.

When a two-row connector mixes a 22-3400-14 and a 22-3400-24 contact, the P/N of the HF contact changes to 3400-04.

90° on PCB

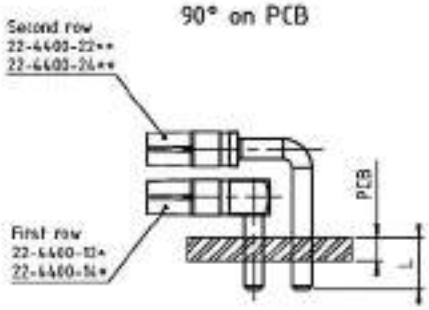

When a two-row connector mixes a 22-4400-12 and a 22-4400-22 contact, the P/N of the HF contact changes to 4400-02.

When a two-row connector mixes a 22-4400-14 and a 22-4400-24 contact, the P/N of the HF contact changes to 4400-04.

Male housing marking

CMM 100/200

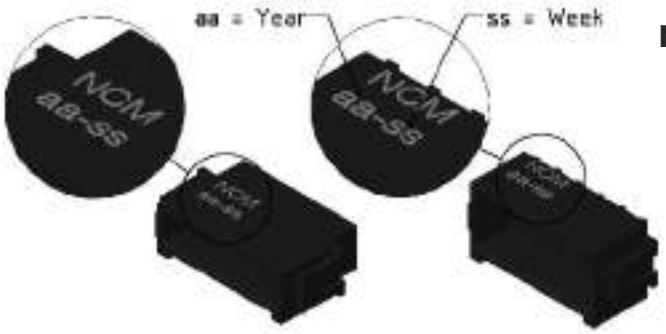

Marking : NCM (Nicomatic) + date code (Lot number)

CMM 220

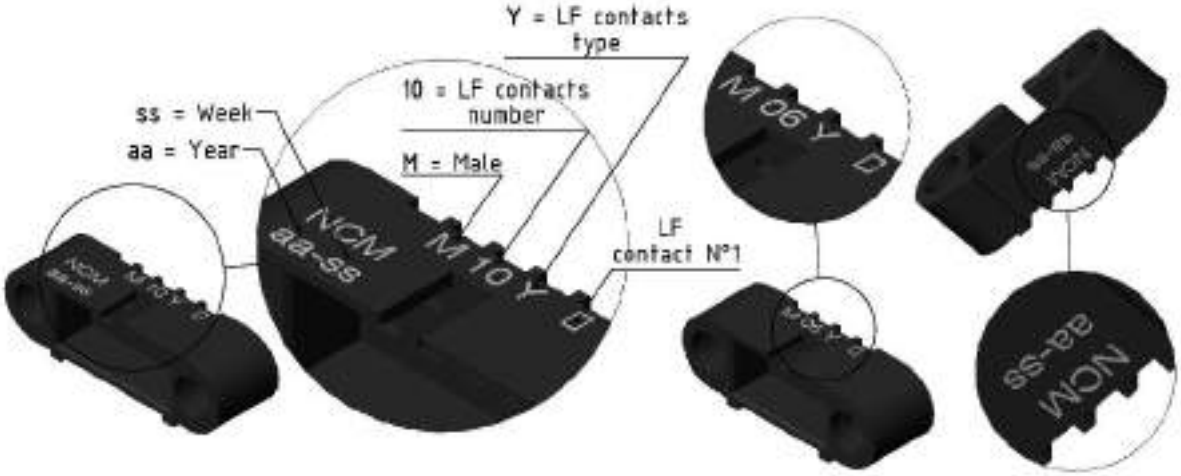

Marking 1 : NCM (Nicomatic) + date code (Lot number)
(LF contacts only) Connector P/N
LF contact number 1

Marking on two faces if the number of LF contacts is < to 10.

Marking 2 : NCM (Nicomatic) + date code (Lot number) : CMM 220 mixed layout (LF + HF/HP)
(as for CMM 100/200) CMM 220 with HF/HP contacts
CMM 220 with 04 LF contacts

Marking LF contacts type : Y-YL-V-VL-R-T-S-C

CMM 320/340

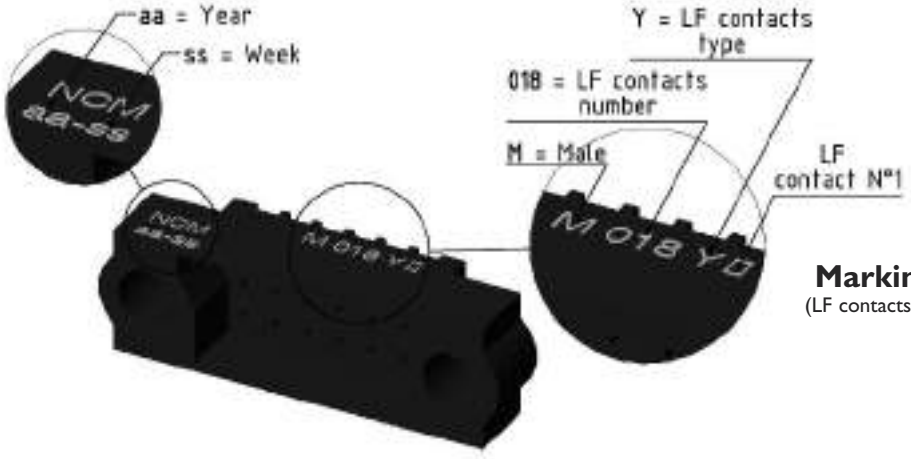

Marking 1 : NCM (Nicomatic)
(LF contacts only) / date code (Lot number)
Connector P/N
LF contact number 1

Marking 2 : NCM (Nicomatic) / date code (Lot number) : CMM 320 mixed layout
(as for CMM 100/200) CMM 320 with HF/HP contacts
CMM 340

Marking LF contacts type : Y-YL-V-VL-S-C

Female housing marking

CMM 100/200

Marking : NCM (Nicomatic) + date code (Lot number)

CMM 220

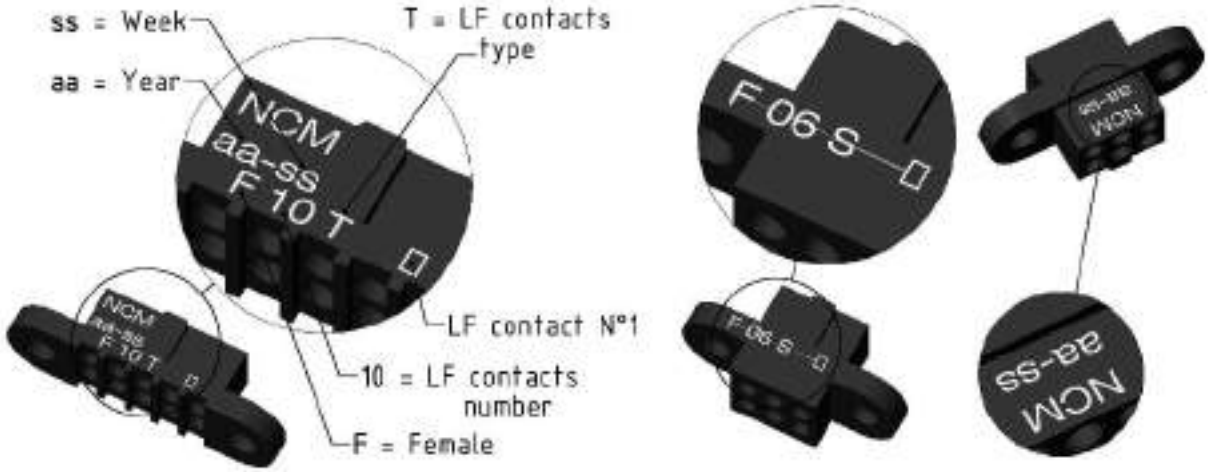

Marking 1 : (LF contacts only) NCM (Nicomatic) + date code (Lot number)
Connector P/N
LF contact number 1

Marking on two faces if the number of LF contacts is < to 10.

Marking 2 : (as for CMM 100/200) NCM (Nicomatic) + date code (Lot number) : CMM 220 mixed layout (LF + HF/HP)
CMM 220 with HF/HP contacts
CMM 220 with 04 LF contacts

Marking LF contacts type : Y-YL-V-VL-R-T-S-C-PF

CMM 320/340

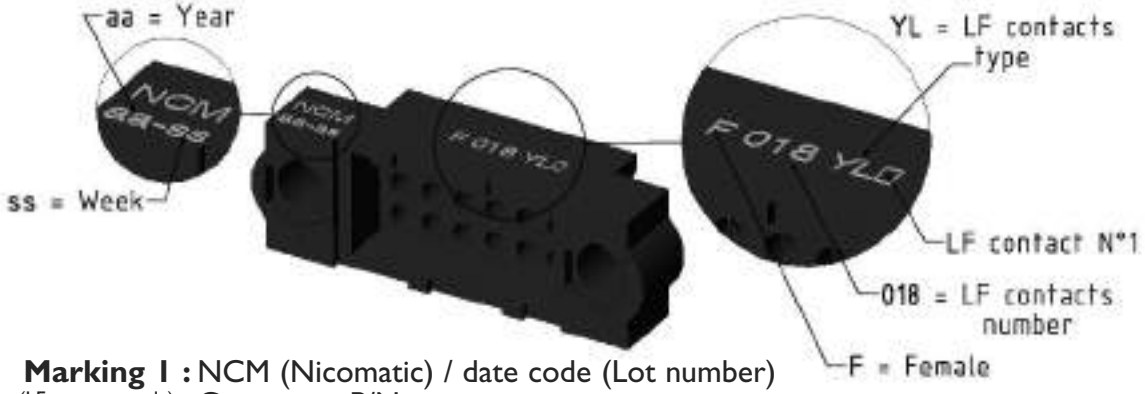

Marking 1 : (LF contacts only) NCM (Nicomatic) / date code (Lot number)
Connector P/N
LF contact number 1

Marking 2 : (as for CMM 100/200) NCM (Nicomatic) / date code (Lot number) : CMM 320 mixed layout HF/HP contacts
CMM 320 with HF/HP contacts
CMM 340

Marking LF contacts type : Y-YL-V-VL-S-C-PF

Nicomatic CMM part

	Code with Low Frequency contacts only					Additional code for mixed-layout connector (HF/HP)		
	Series	Gender	Termination Style	Number of LF contacts	Fixing Hardware	Number of HF/HP contacts pin 1 side (LF contact number 1)	Number of HF/HP contacts opposite to LF contact number 1	HF/HP Contact Type
	▢▢	▢	▢	nnn	▢ –	yy	zz	– ▢▢▢▢▢▢▢
1 row	10	1 male 2 female	Refer to table on page 7	02 to 25 (nn)	With Latch page 22 Without Latch	No HF / HP contacts		
2 rows	20	1 male 2 female	Refer to table on page 7	04 to 50 (nn)	With Latch page 22 Without Latch			
2 rows	22	1 male 2 female	Refer to table on page 7	04 to 60 (nn)	Refer to pages 43 to 46	Depends upon the number of LF contacts If use with shifted central key, please refer to page 38 HF / HP : 15 contacts max. Type of HF/HP contact : please refer to pages 8-9		Coaxmatic™ 30
3 rows	32	1 male 2 female	Refer to table on page 7	006 to 120 (nnn)	Refer to pages 69 to 74	Depends upon the number of LF contacts HF / HP : 20 contacts max. Type of HF/HP contact : please refer to pages 8-9		Coaxmatic™ 30
3 rows	34	1 male 2 female	Refer to table on page 7	Refer to the series 320 (nnn)	Refer to pages 69 to 74	Depends upon the number of LF contacts HF / HP : 64 contacts max. Type of HF/HP contact : please refer to pages 10-11		Coaxmatic™ 22

Note :
For any configuration outside of this part numbering system, please contact us.

numbering system

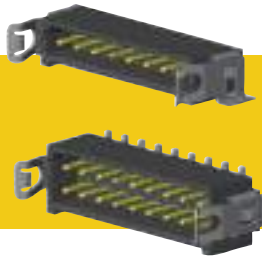

CMM 100/200 Series

p. 17 to 25

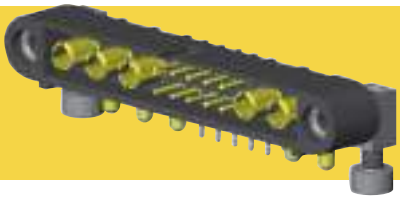

CMM 220 Series

p. 27 to 46

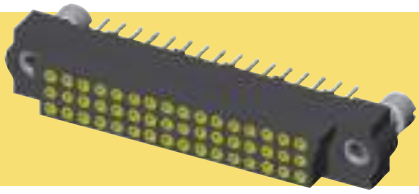
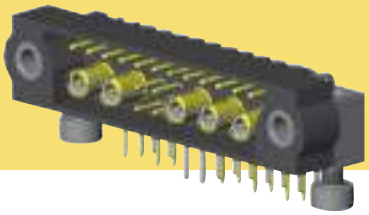

CMM 320 Series

p. 47 to 59

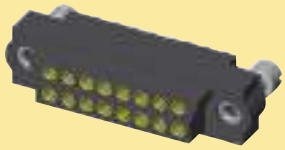

CMM 340 Series

p. 60 to 74

High Frequency and High Power contacts (HF) (HP)

p. 75 to 102

Tools and accessories

p. 103 to 112

Cable instructions & assembly

p. 113 to 122

CMM 100 / 200

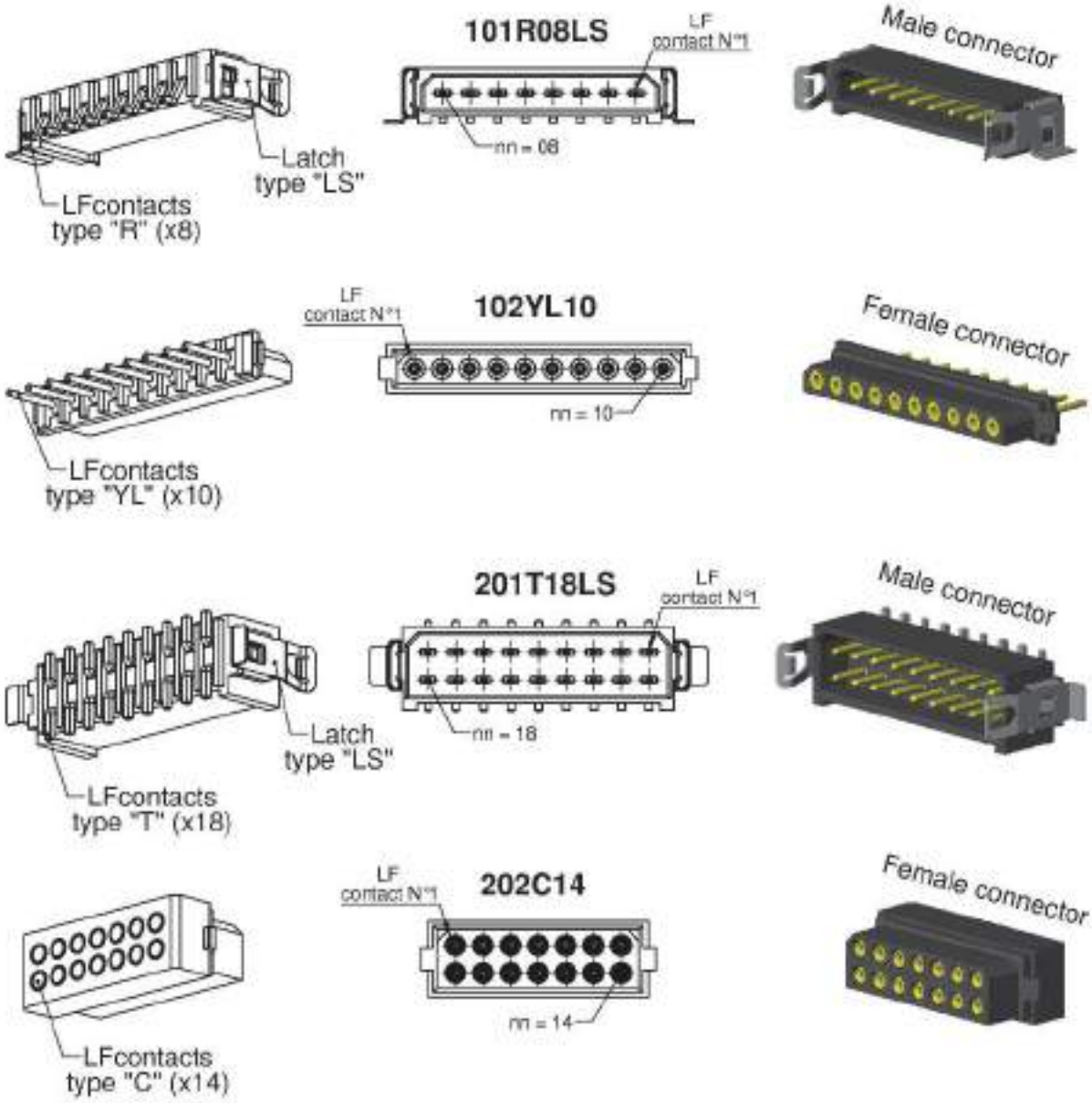

PART NUMBERING REMINDER

	Code with Low Frequency contacts only				
	Series	Gender	Termination Style	Number of LF contacts	Fixing Hardware
				n n	
1 row	10	1 male 2 female	Refer to table on page 7	02 to 25	With Latch "L", "FL", "LS" page 22 Without Latch " "
2 rows	20	1 male 2 female	Refer to table on page 7	04 to 50	With Latch "L", "FL", "LS" page 22 Without Latch " "

Configuration
CMM 100

CONNECTOR SPACING

without latch only

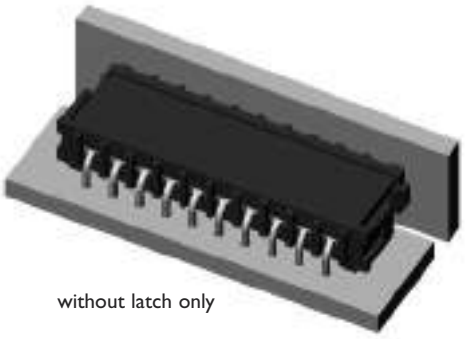

without latch only

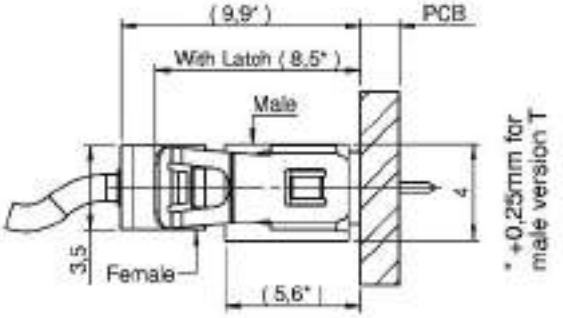

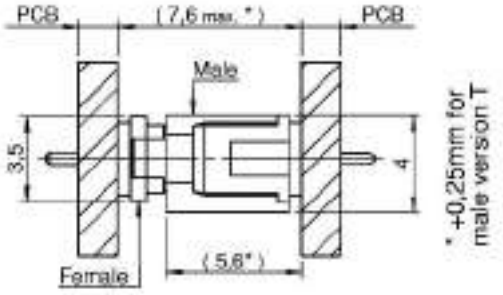

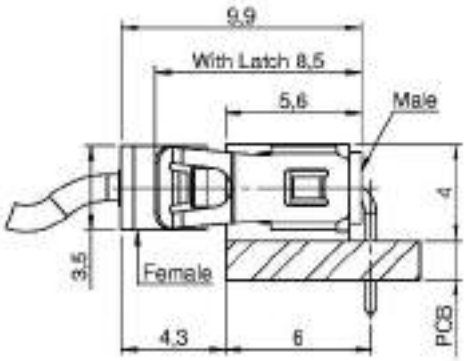

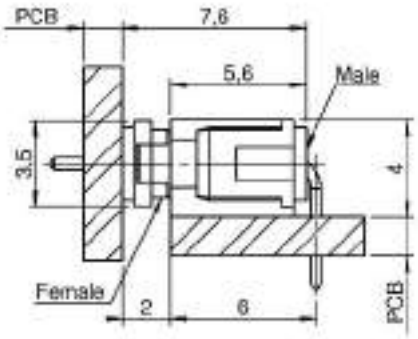

CONTACTS POSITIONS

Female connectors
(shown looking onto mating face)

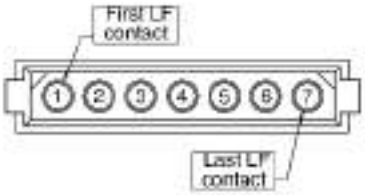

LF contacts min. 02 / max. 25

Male connectors
(shown looking onto mating face)

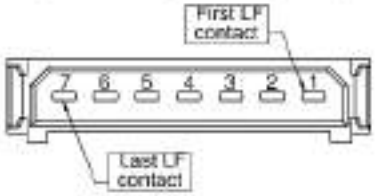

LF contacts min. 02 / max. 25

Configuration
CMM 200

CONNECTOR SPACING

without latch only

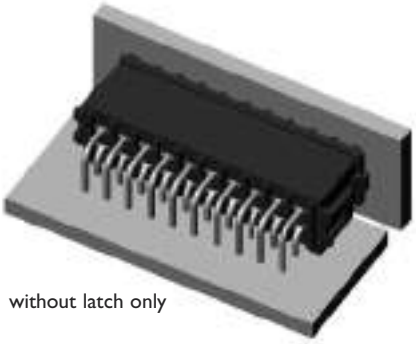

without latch only

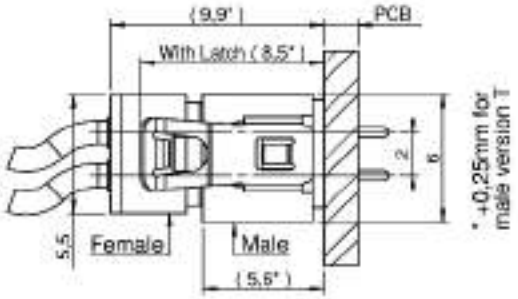

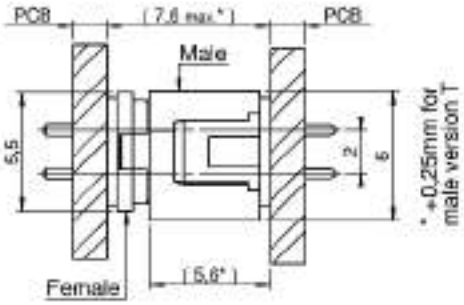

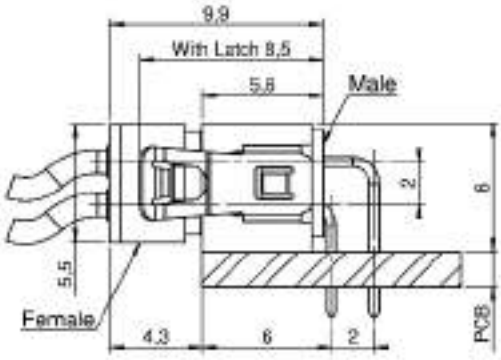

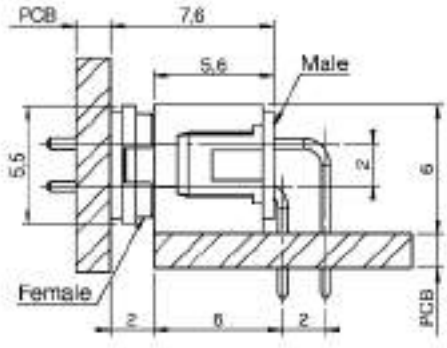

CONTACTS POSITIONS

Female connectors
(shown looking onto mating face)

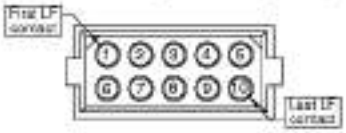

LF contacts min. 04 / max. 50

Male connectors
(shown looking onto mating face)

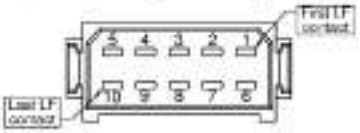

LF contacts min. 04 / max. 50

CMM 100 / 200 male

STRAIGHT PCB

Part numbering :

"1" = Series 100
"2" = Series 200

Type :Y-YL

0 1 _ _ n n _

"L", "FL" = with latch page 22
" " = without latch

nn = number of LF contacts

Type	L
Y	3
YL	4,5

Calculation :

CMM 100	CMM 200
A = (nn x 2) - 2	**A** = nn - 2
B = A + 4,7	**B** = A + 4,7
C = A + 5,4	**C** = A + 5,4

Refer to dimension table on cover page

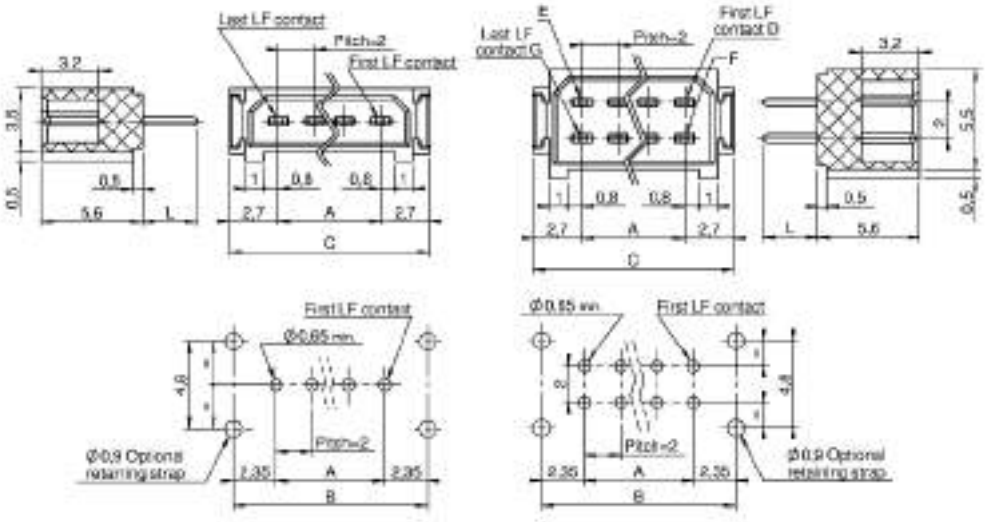

nn min = 02 nn max = 25

nn min = 04 nn max = 50

90° PCB

Part numbering :

"1" = Series 100
"2" = Series 200

Type :V-VL

0 1 _ _ n n _

"L", "FL" = with latch page 22
" " = without latch

nn = number of LF contacts

Type	L
V	3
VL	4,5

Calculation :

CMM 100	CMM 200
A = (nn x 2) - 2	**A** = nn - 2
B = A + 4,7	**B** = A + 4,7
C = A + 5,4	**C** = A + 5,4

Refer to dimension table on cover page

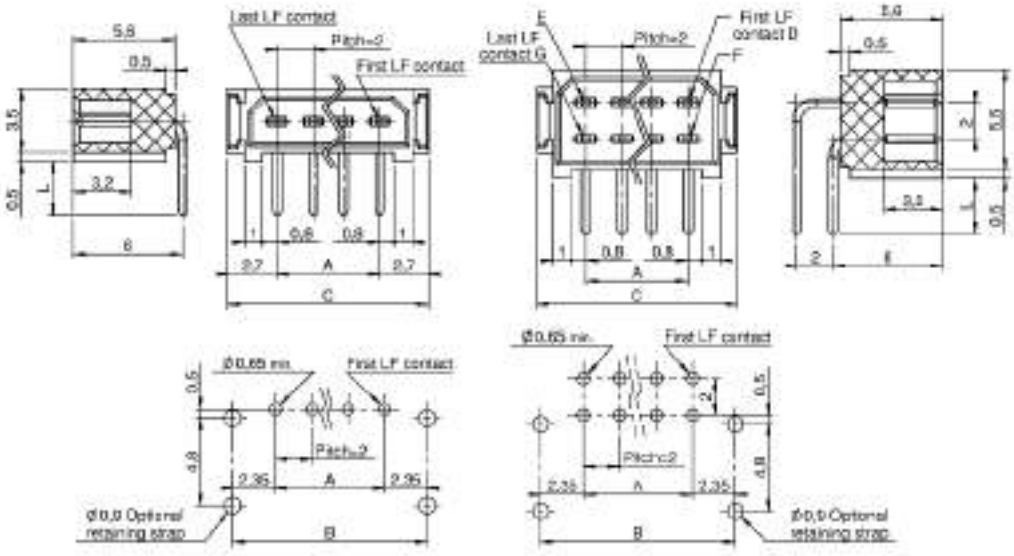

nn min = 02 nn max = 25

nn min = 04 nn max = 50

CMM 100 / 200 male

STRAIGHT SMT

Part numbering :

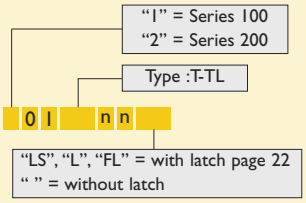

nn = number of LF contacts

Calculation :

CMM 100	CMM 200
A = (nn x 2) - 2	**A** = nn - 2
C = A + 5,4	**C** = A + 5,4

Refer to dimension table on cover page

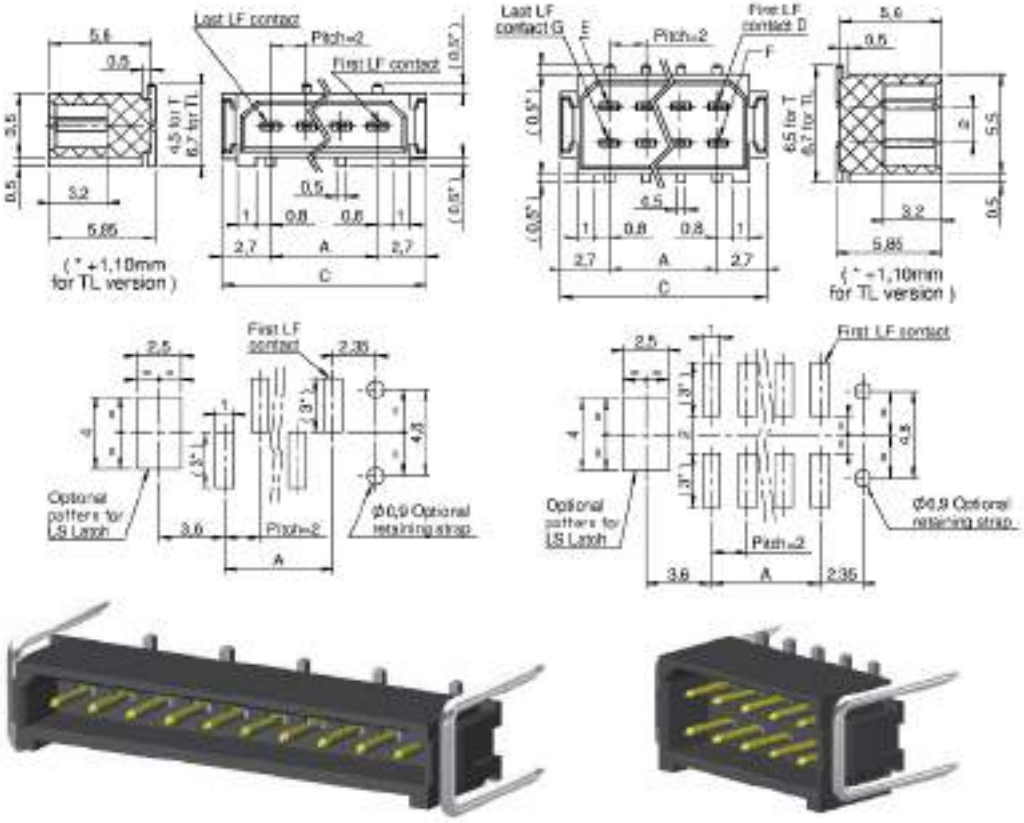

90° SMT

Part numbering :

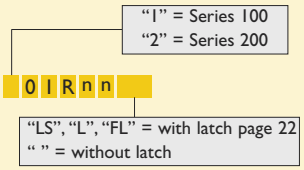

nn = number of LF contacts

Calculation :

CMM 100	CMM 200
A = (nn x 2) - 2	**A** = nn - 2
C = A + 5,4	**C** = A + 5,4

Refer to dimension table on cover page

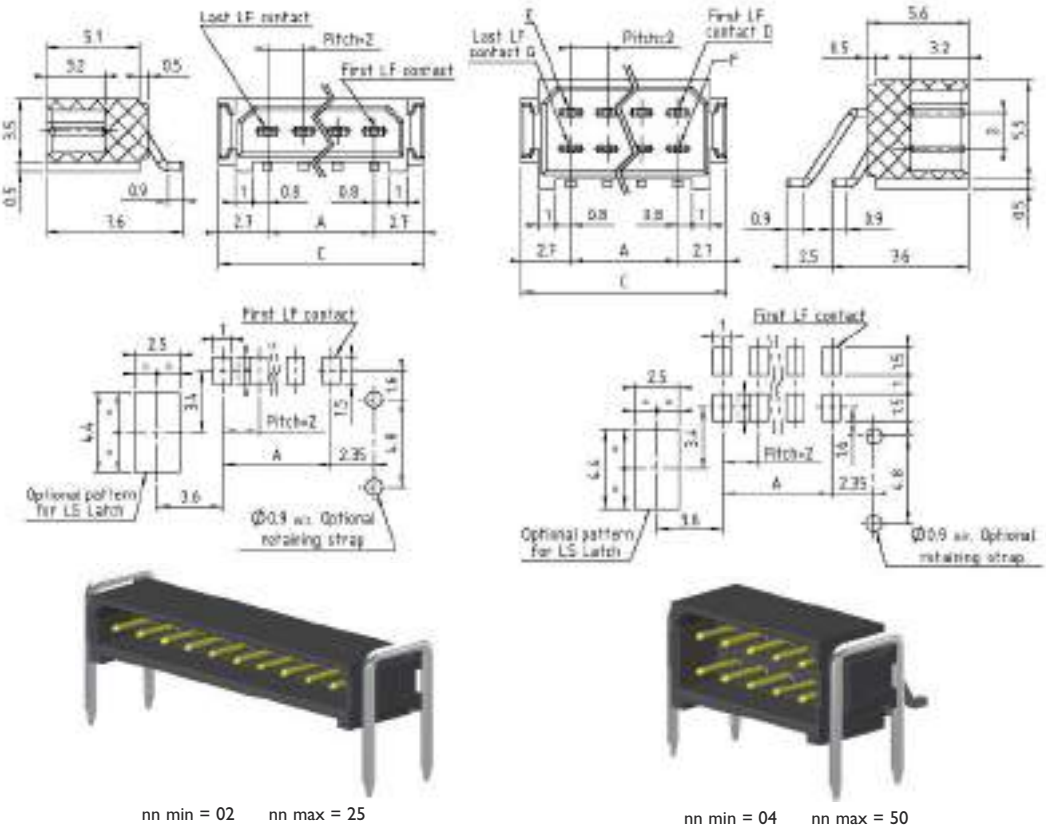

CMM 100 / 200 male

CRIMP

Part numbering :

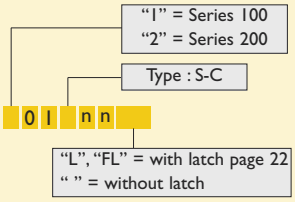

Type	Gauge
S	24-28
C	22

nn = number of LF contacts

Calculation :

CMM 100	CMM 200
A = (nn x 2) - 2	**A** = nn - 2
C = A + 5,4	**C** = A + 5,4

Refer to dimension table on cover page

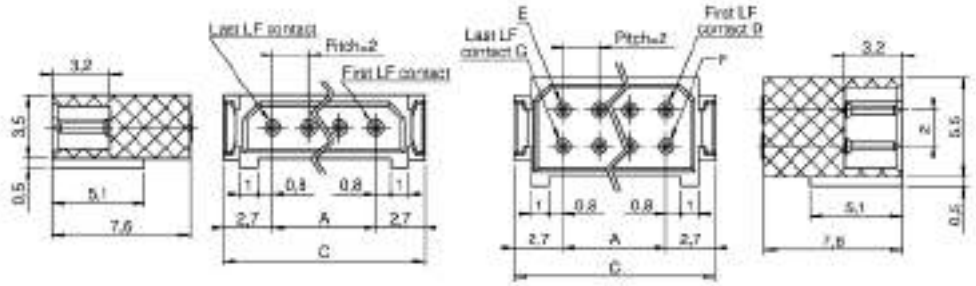

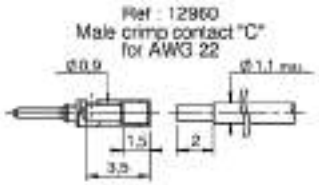

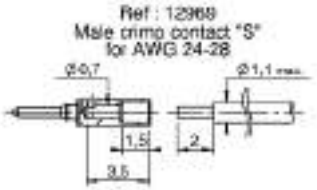

nn min = 02 nn max = 25

nn min = 04 nn max = 50

RETENTION LATCHES FOR CMM 100 / 200 MALE

Straight latch with locking "L"

Straight latch without locking "FL"

Latch for CMM connector with T termination style "LS"

Latch for CMM connector with R termination style "LS"

The strain relief straps are supplied with all male CMM 100 / 200 connectors mounted with latches L or FL type except for Y & YL terminations

PCB Thickness	P/N	Termination style			
< 2,5 mm	13218	V	Y	T/TL	R
> 2,5 mm	13816	VL	YL	T/TL	R

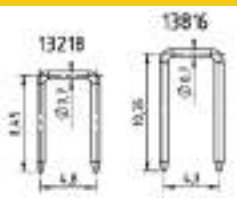

If no strain relief straps with your connector, please order under P/Ns on the left

CMM 100 / 200 female

STRAIGHT PCB

Part numbering :

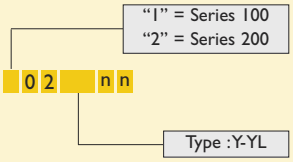

Type	L
Y	3
YL	4,5

nn = number of LF contacts

Calculation :

CMM 100	CMM 200
A = (nn x 2) - 2	**A** = nn - 2
B = A + 5	**B** = A + 5

Refer to dimension table on cover page

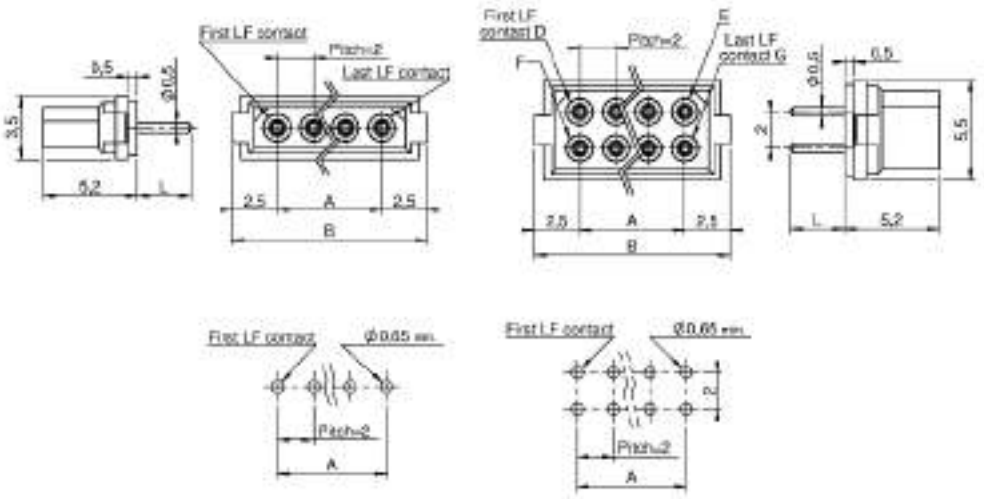

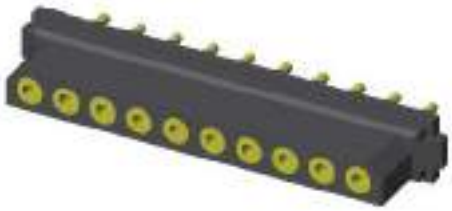

nn min = 02 nn max = 25

nn min = 04 nn max = 50

90° PCB

Part numbering :

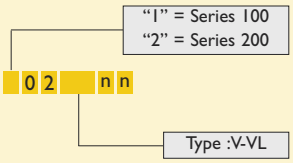

Type	L
V	3
VL	4,5

nn = number of LF contacts

Calculation :

CMM 100	CMM 200
A = (nn x 2) - 2	**A** = nn - 2
B = A + 5	**B** = A + 5

Refer to dimension table on cover page

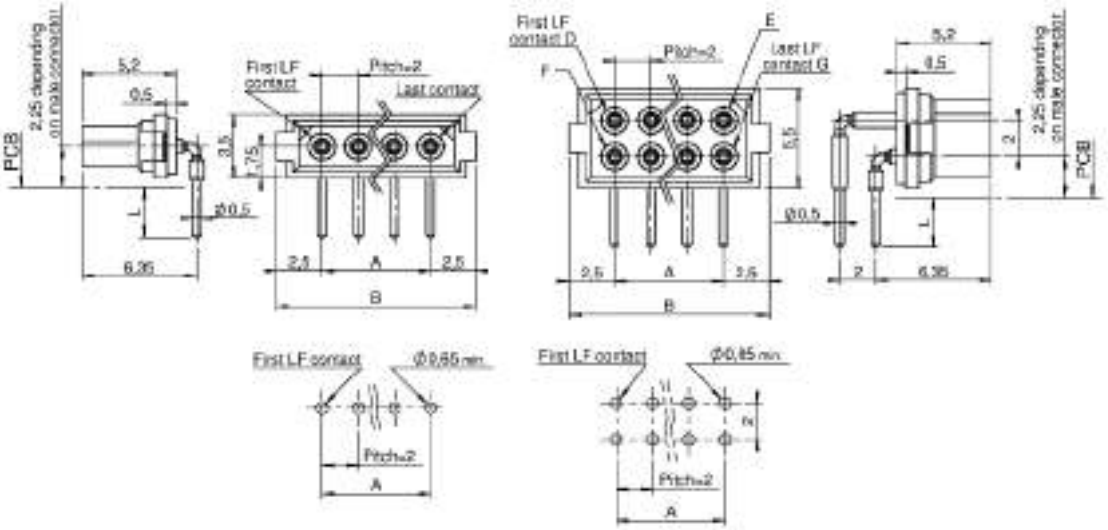

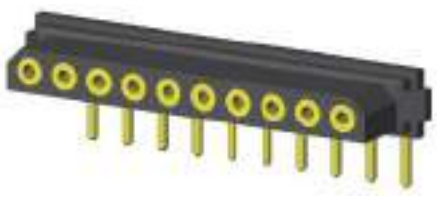

nn min = 02 nn max = 25

nn min = 04 nn max = 50

CMM 100 / 200 female

STRAIGHT SMT

Part numbering :

"1" = Series 100
"2" = Series 200

0 2 _ n n

Type : T-TL

nn = number of LF contacts

Calculation :

CMM 100	CMM 200
A = (nn x 2) - 2	**A** = nn - 2
B = A + 5	**B** = A + 5

Refer to dimension table on cover page

Optional: Packaging in reel available upon request

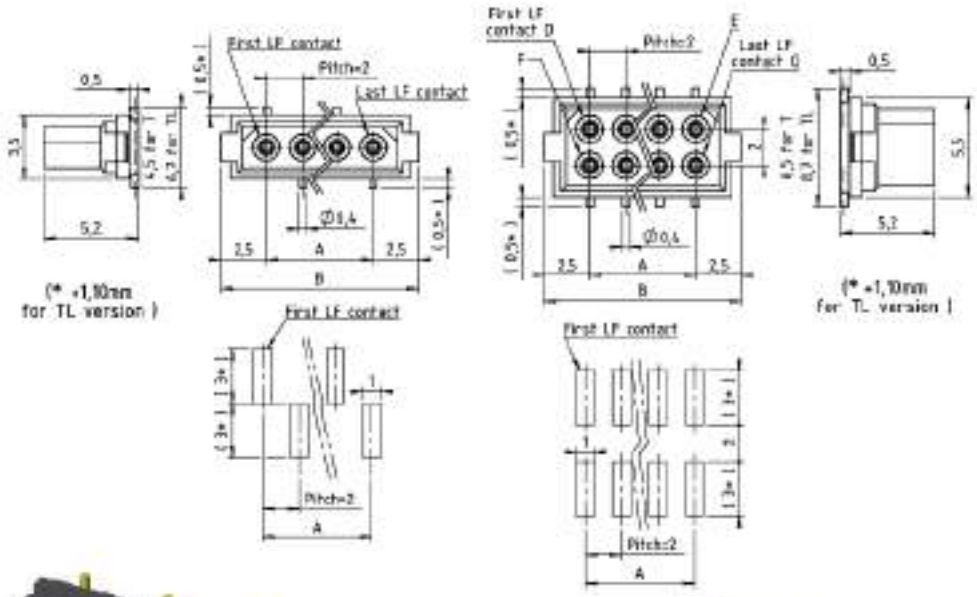

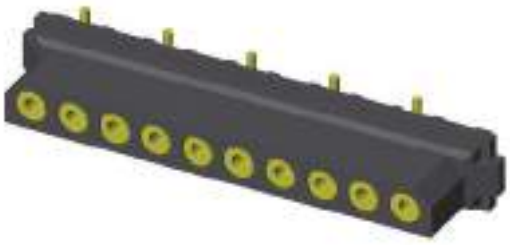

nn min = 02 nn max = 25

nn min = 04 nn max = 50

CRIMP

Part numbering :

"1" = Series100
"2" = Series 200

0 2 _ n n

Type : S-C

nn = number of LF contacts

Type	Gauge
S	24-28
C	22

Calculation :

CMM 100	CMM 200
A = (nn x 2) - 2	**A** = nn - 2
B = A + 5	**B** = A + 5

Refer to dimension table on cover page

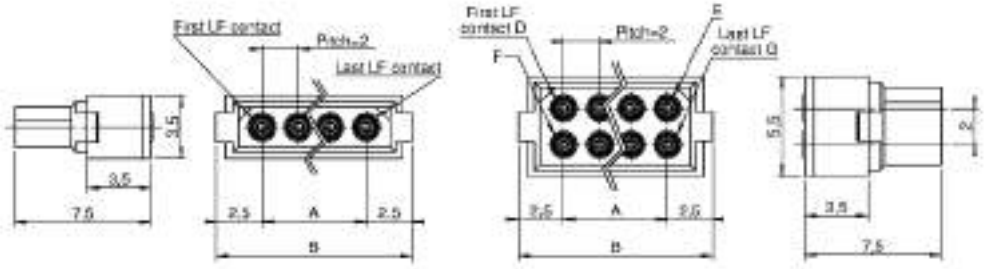

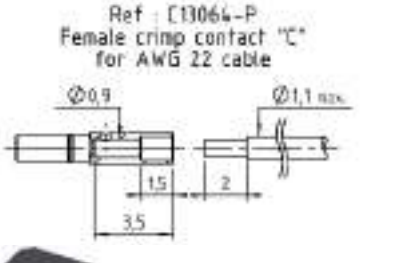

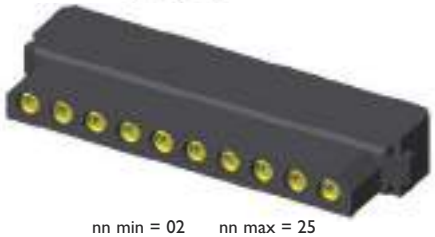

nn min = 02 nn max = 25

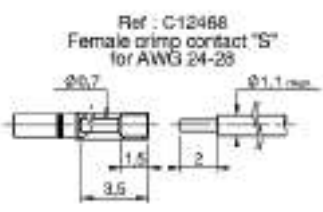

nn min = 04 nn max = 50

CMM 100 / 200 female

STRAIGHT PRESS FIT

Part numbering :

"1" = Series 100
"2" = Series 200

0 2 PF n n

nn = number of LF contacts

Calculation :

CMM 100	CMM 200
A = (nn x 2) - 2	**A** = nn - 2
B = A + 5	**B** = A + 5

Refer to dimension table on cover page

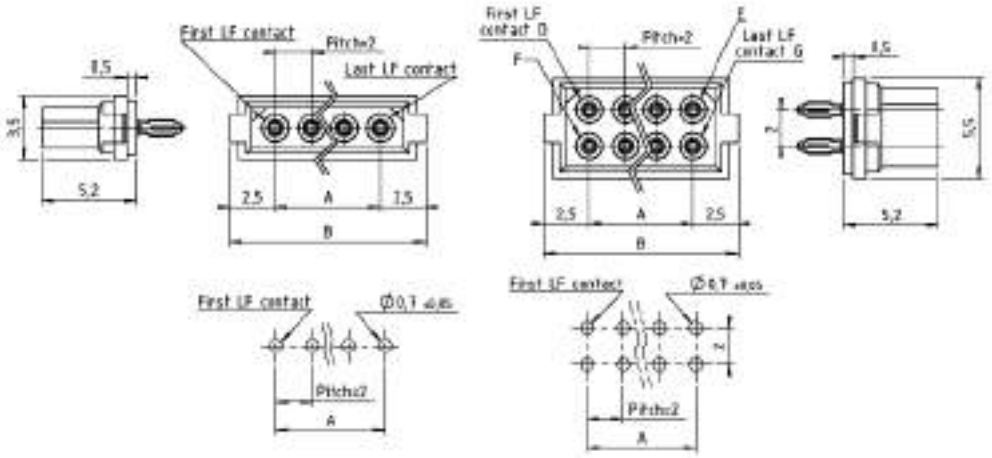

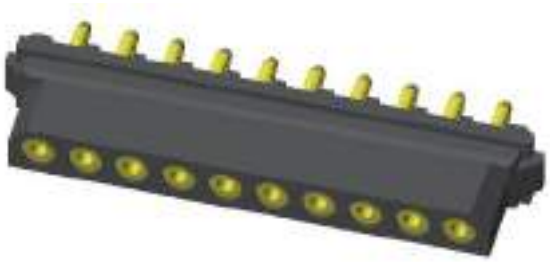

nn min = 02 nn max = 25

nn min = 04 nn max = 50

90° SMT

Part numbering :

"1" = Series 100
"2" = Series 200

0 2 R n n

nn = number of LF contacts

Optional: Packaging in reel available upon request

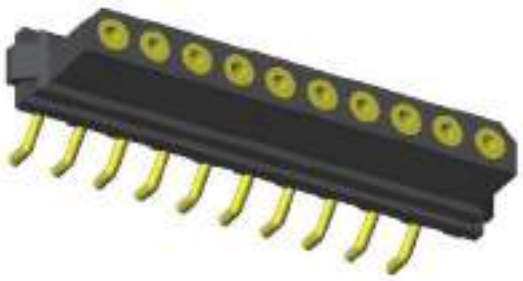

nn min = 02 nn max = 25

nn min = 04 nn max = 50

Upon request only

CMM 220 with LF contacts

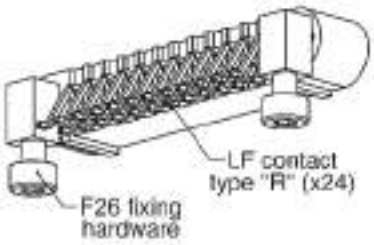

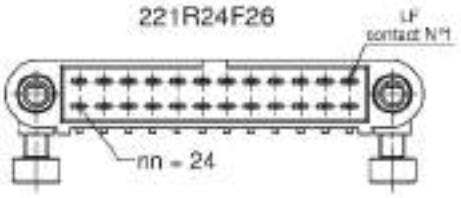

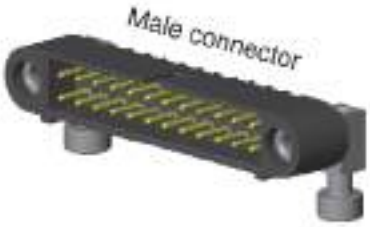

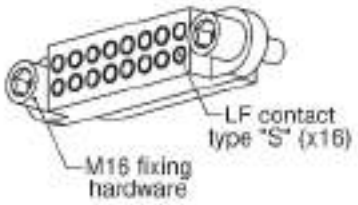

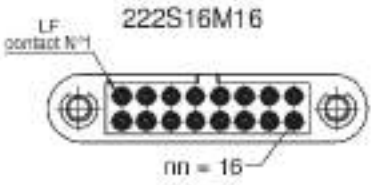

PART NUMBERING REMINDER

	Code with Low Frequency contacts only				
	Series	Gender	Termination Style	Number of LF contacts	Fixing Hardware
				n n	
2 rows	22	1 male 2 female	Refer to table on page 7	04 to 60	Refer to pages 43 to 46

CMM 220
Configuration

CONNECTOR SPACING

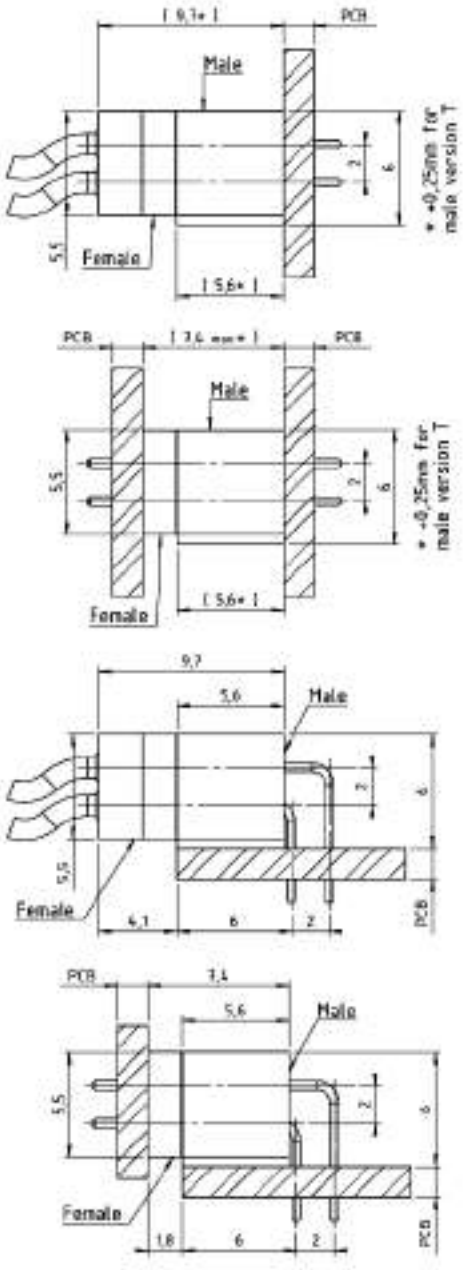

CONTACTS POSITIONS

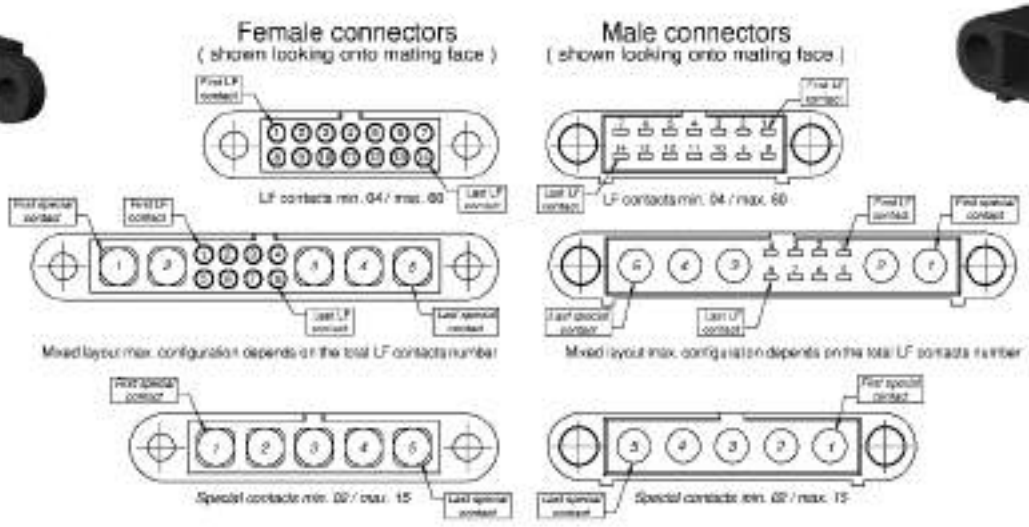

CMM 220 male

STRAIGHT PCB

nn min = 04 nn max = 60

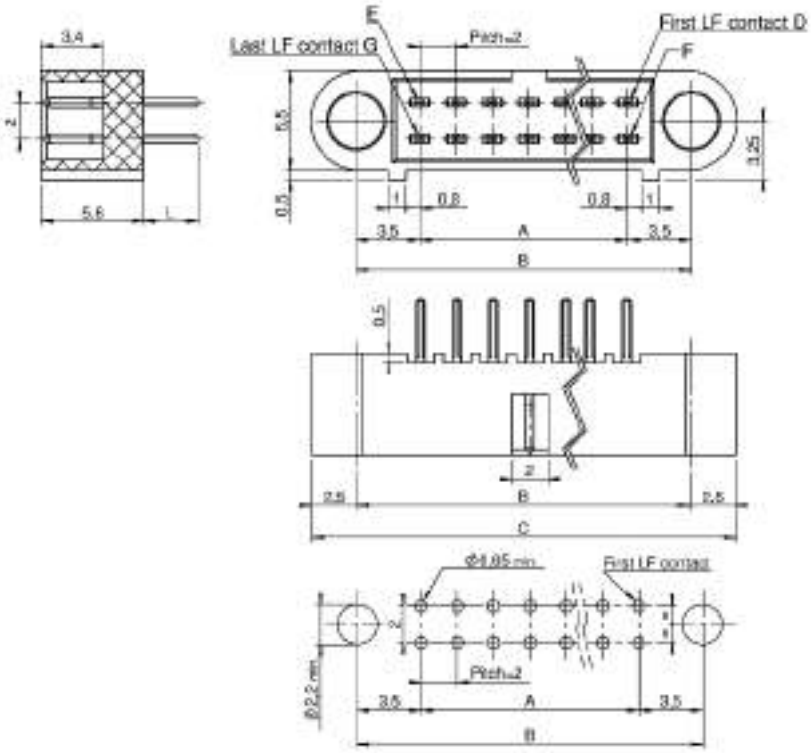

Part numbering :

Type :Y-YL

2 2 1 n n

See Fixing on page 43, 44 "Fxx" without fixing

nn = number of LF contacts

Type	L
Y	3
YL	4,5

Calculation :

A = nn - 2
B = A + 7
C = A + 12

Refer to dimension table on cover page

90° PCB

nn min = 04 nn max = 60

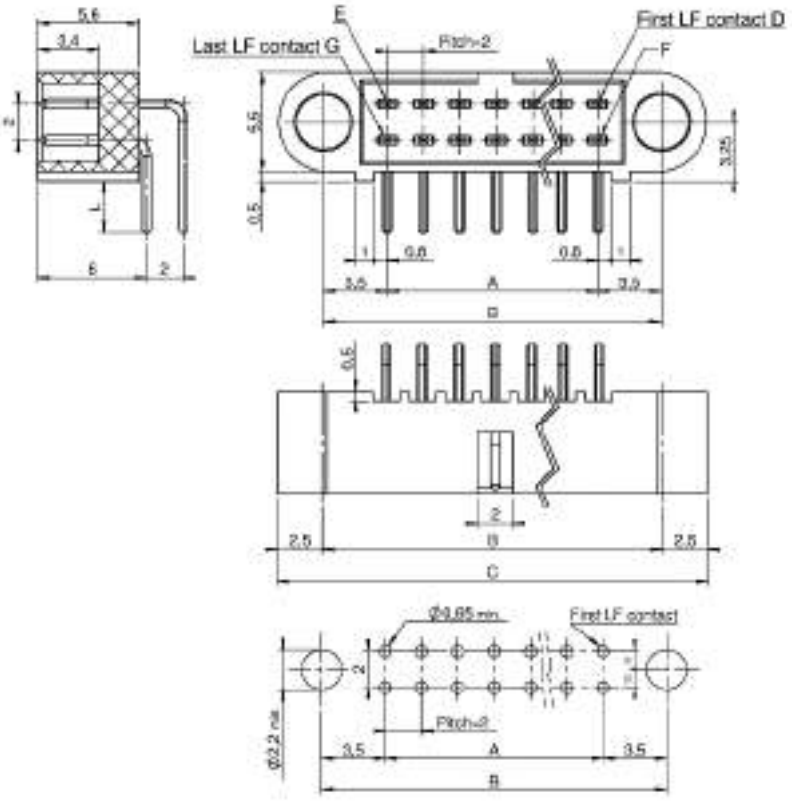

Part numbering :

Type :V-VL

2 2 1 n n

See Fixing on page 43, 44 "Fxx" without fixing

nn = number of LF contacts

Type	L
V	3
VL	4,5

Calculation :

A = nn - 2
B = A + 7
C = A + 12

Refer to dimension table on cover page

CMM 220 male

STRAIGHT SMT

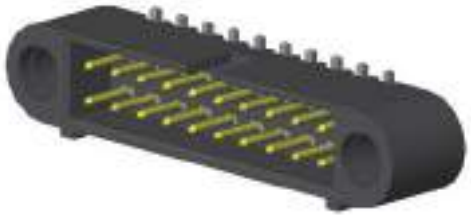

nn min = 04 nn max = 60

Part numbering :

Type : T-TL

2 2 I n n

See Fixing on page 43, 44
"Fxx" without fixing

nn = number of LF contacts

Optional: Packaging in reel available upon request

Calculation :

A = nn - 2
B = A + 7
C = A + 12

Refer to dimension table on cover page

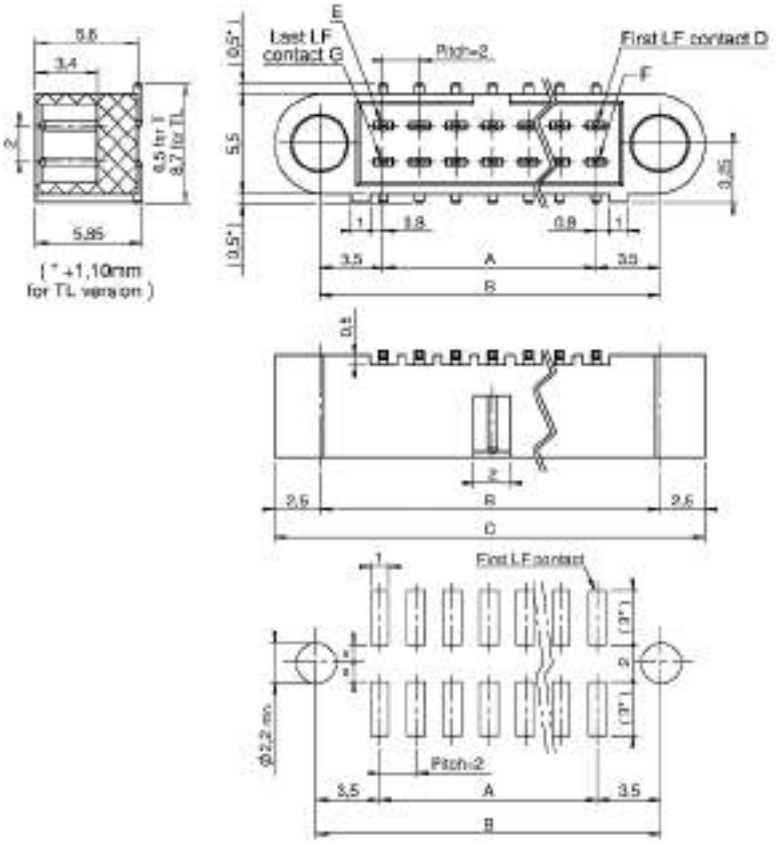

90° SMT

nn min = 04 nn max = 60

Part numbering :

2 2 I R n n

See Fixing on page 43, 44
"Fxx" without fixing

nn = number of LF contacts

Optional: Packaging in reel available upon request

Calculation :

A = nn - 2
B = A + 7
C = A + 12

Refer to dimension table on cover page

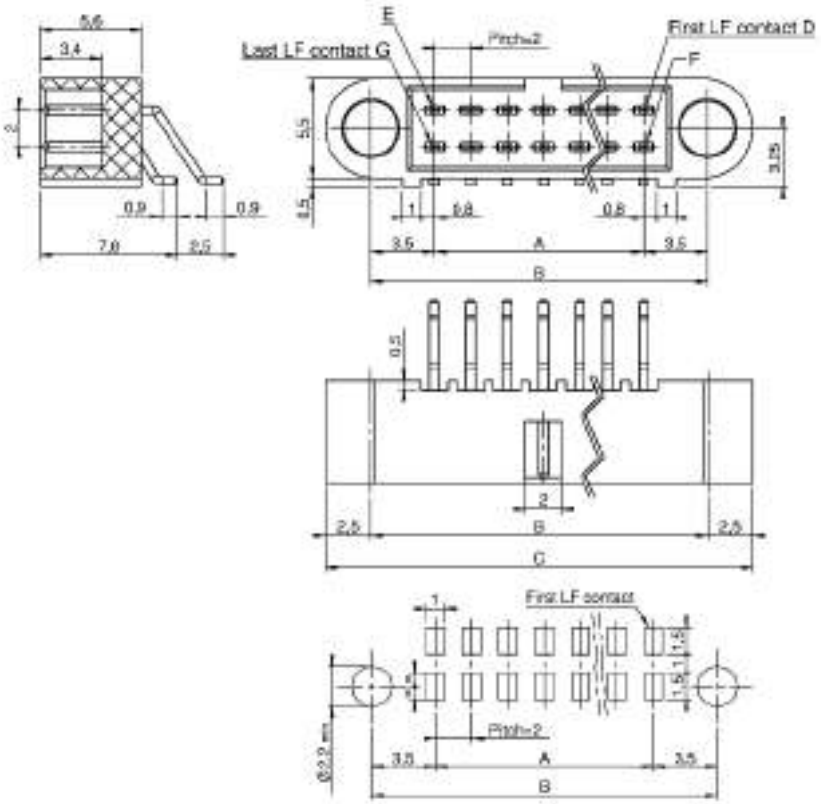

CMM 220 male

CRIMP

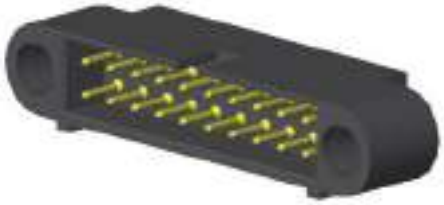

nn min = 04 nn max = 60

Part numbering :

Type : S-C

2 2 I n n

See Fixing on page 43, 44
"Fxx" without fixing

nn = number of LF contacts

Type	Gauge
S	24-28
C	22

Calculation :

A = nn - 2
B = A + 7
C = A + 12

Refer to dimension table on cover page

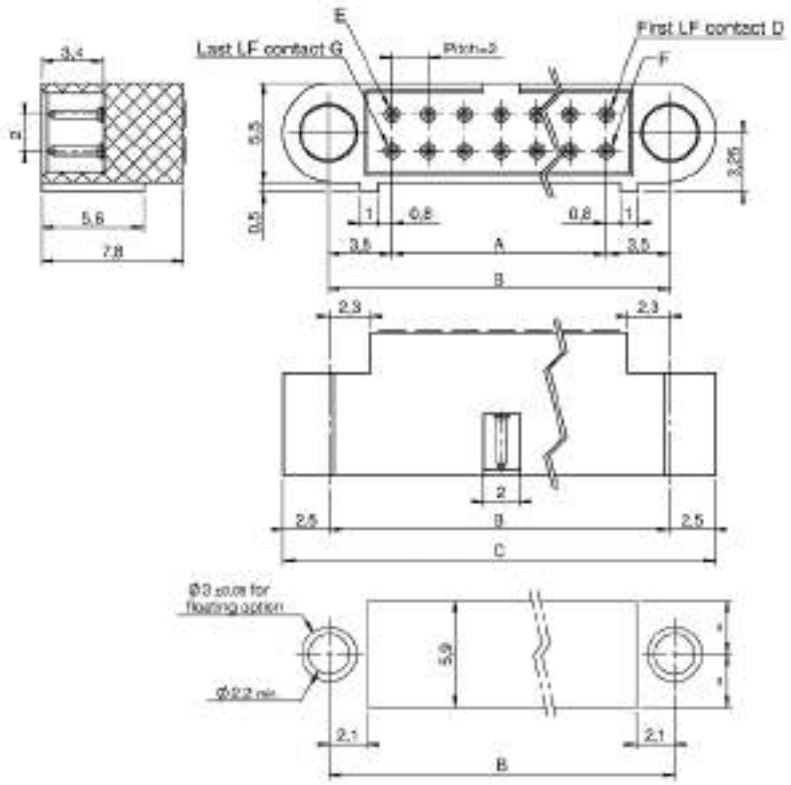

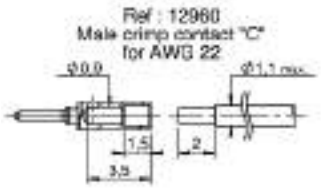

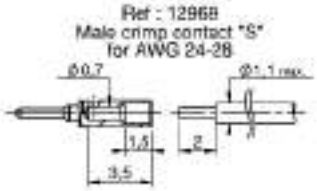

CMM 220 female

STRAIGHT PCB

nn min = 04 nn max = 60

Part numbering :

Type :Y-YL

2 2 2 [ ] n n [ ]

See Fixing on page 45-46
"Mxx" without fixing

nn = number of LF contacts

Type	L
Y	3
YL	4,5

Calculation :

A = nn - 2
B = A + 7
C = A + 12

Refer to dimension table on cover page

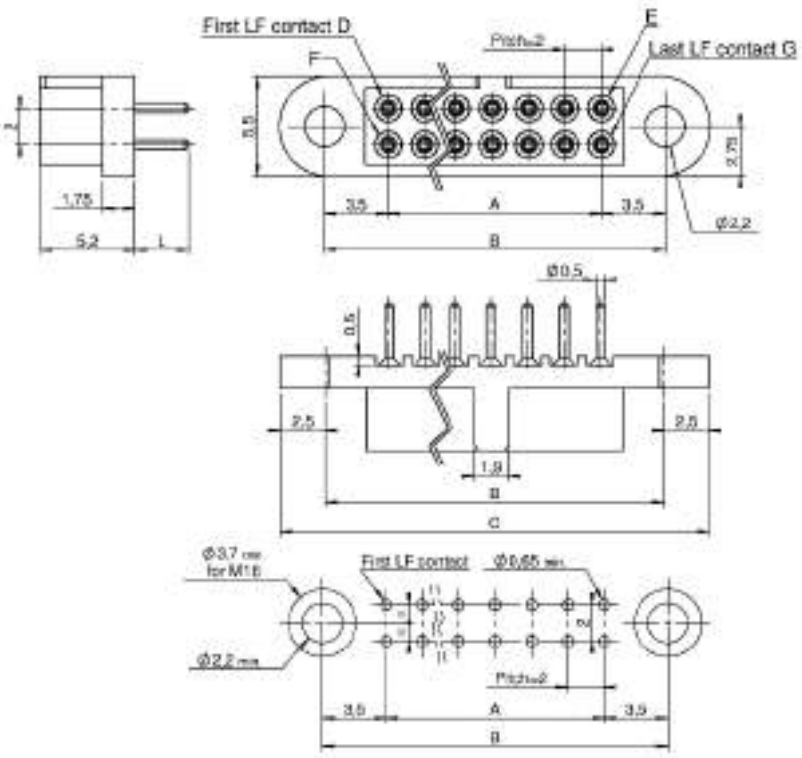

90° PCB

nn min = 04 nn max = 60

Part numbering :

Type :V-VL

2 2 2 [ ] n n [ ]

See Fixing on page 45
"Mxx" without fixing

nn = number of LF contacts

Type	L
V	3
VL	4,5

Calculation :

A = nn - 2
B = A + 7
C = A + 12

Refer to dimension table on cover page

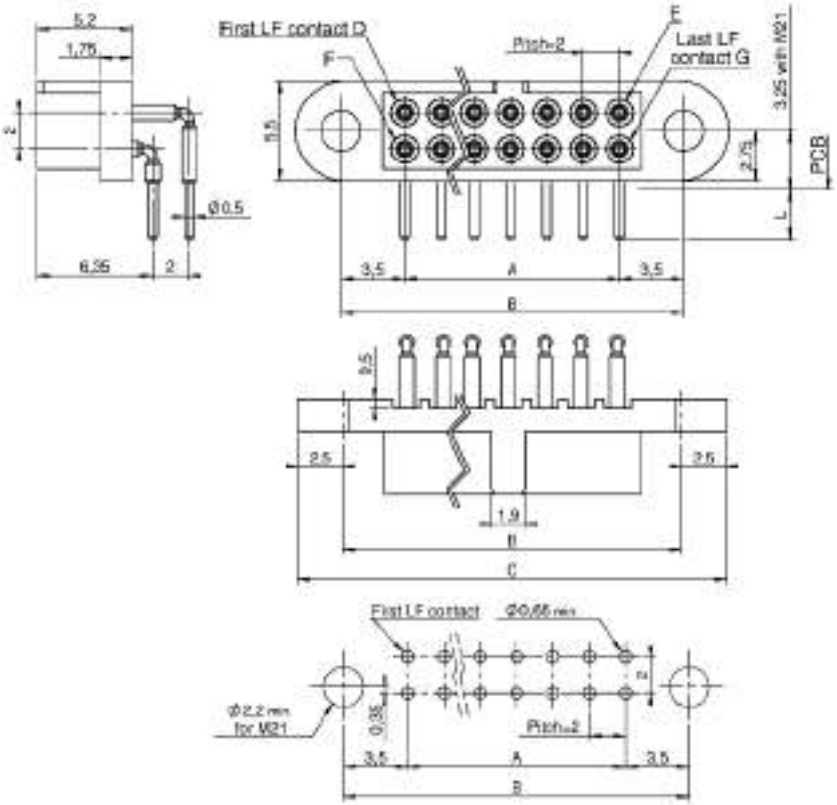

CMM 220 female

STRAIGHT SMT

nn min = 04 nn max = 60

Part numbering :

Type :T-TL

2 2 2 [ ] n n [ ]

See Fixing on page 45-46
"Mxx" without fixing

nn = number of LF contacts

Optional: Packaging in reel available upon request

Calculation :

A = nn - 2
B = A + 7
C = A + 12

Refer to dimension table on cover page

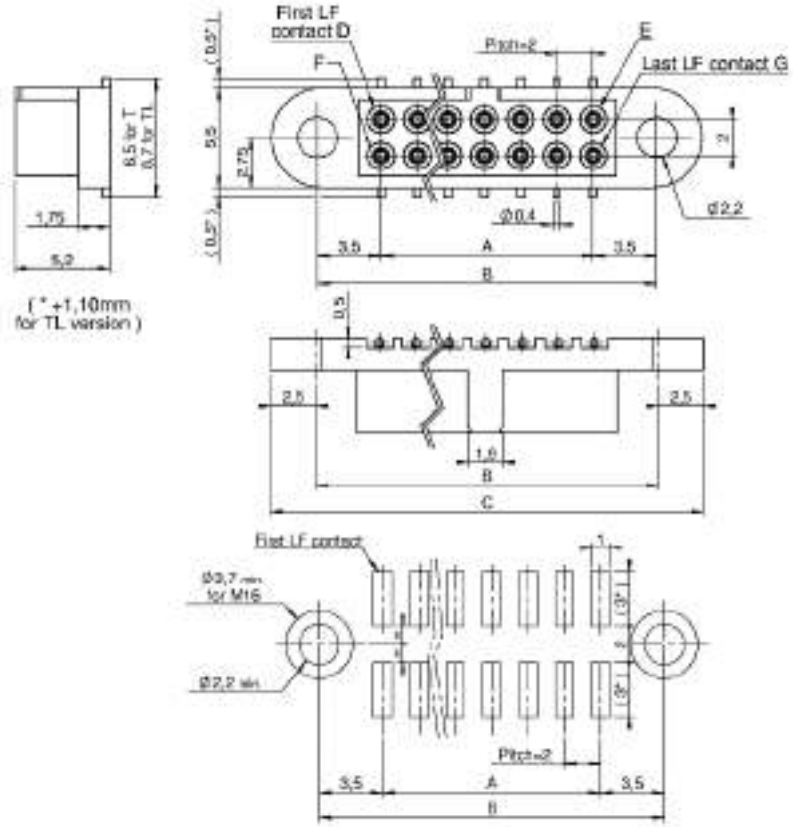

90° SMT

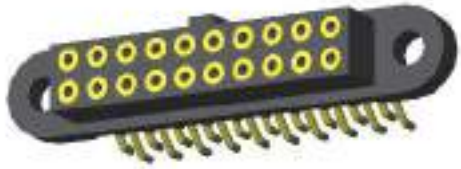

nn min = 04 nn max = 60

Part numbering :

2 2 2 R n n [ ]

See Fixing on page 45
"Mxx" without fixing

nn = number of LF contacts

Optional: Packaging in reel available upon request

Calculation :

A = nn - 2
B = A + 7
C = A + 12

Refer to dimension table on cover page

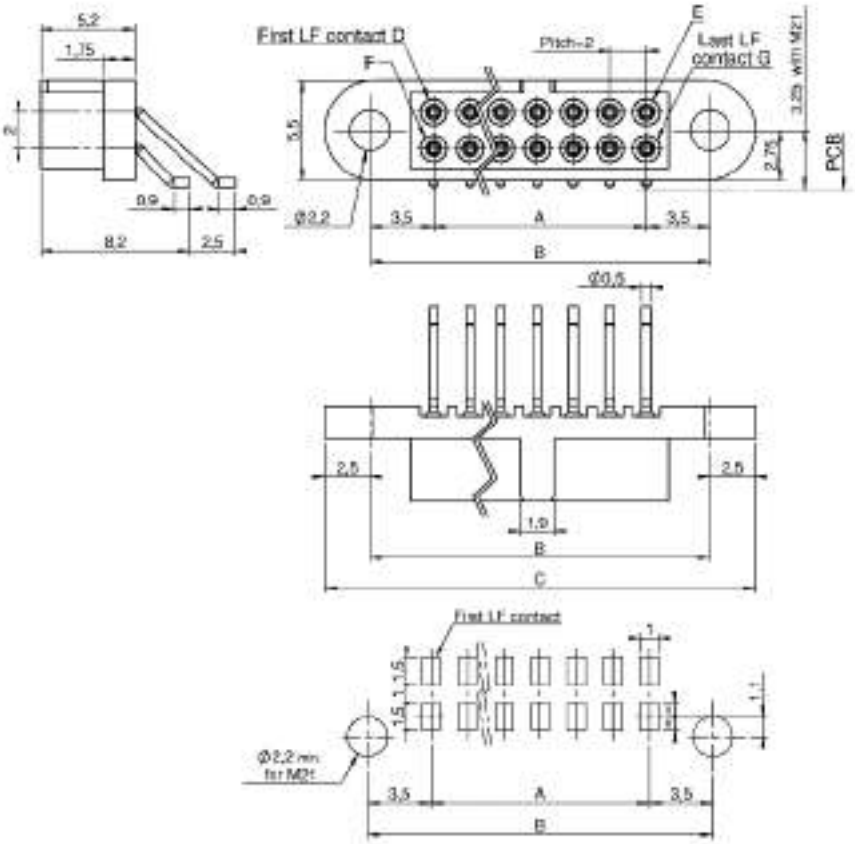

CMM 220 female

STRAIGHT PRESS FIT

nn min = 04 nn max = 60

Part numbering :

2 2 2 PF n n

See Fixing on page 45-46 "Mxx" without fixing

nn = number of LF contacts

Calculation :

A = nn - 2
B = A + 7
C = A + 12

Refer to dimension table on cover page

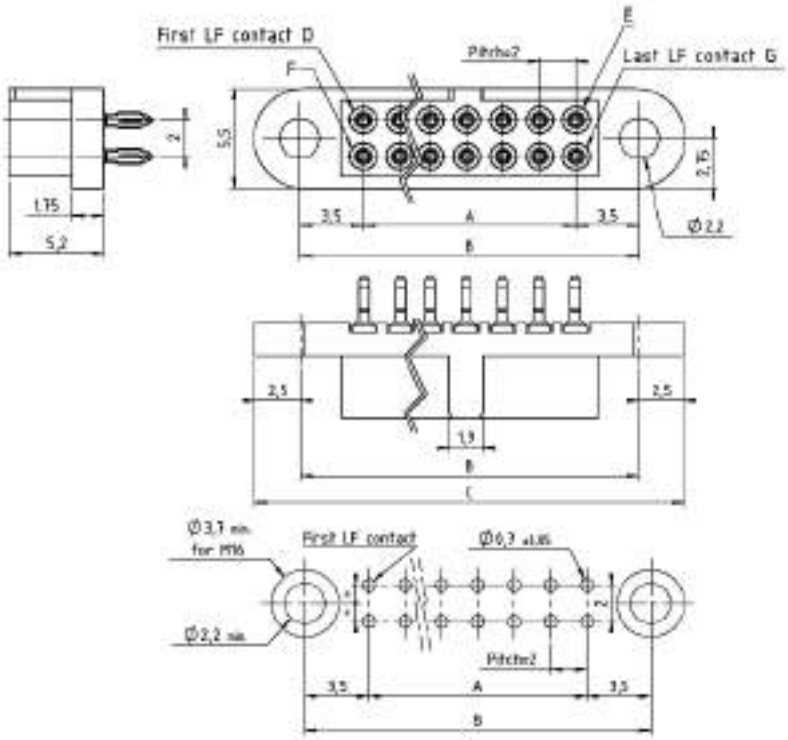

CRIMP

nn min = 04 nn max = 60

Part numbering :

Type : S-C

2 2 2 n n

See Fixing on page 45-46 "Mxx" without fixing

nn = number of LF contacts

Type	Gauge
S	24-28
C	22

Calculation :

A = nn - 2
B = A + 7
C = A + 12

Refer to dimension table on cover page

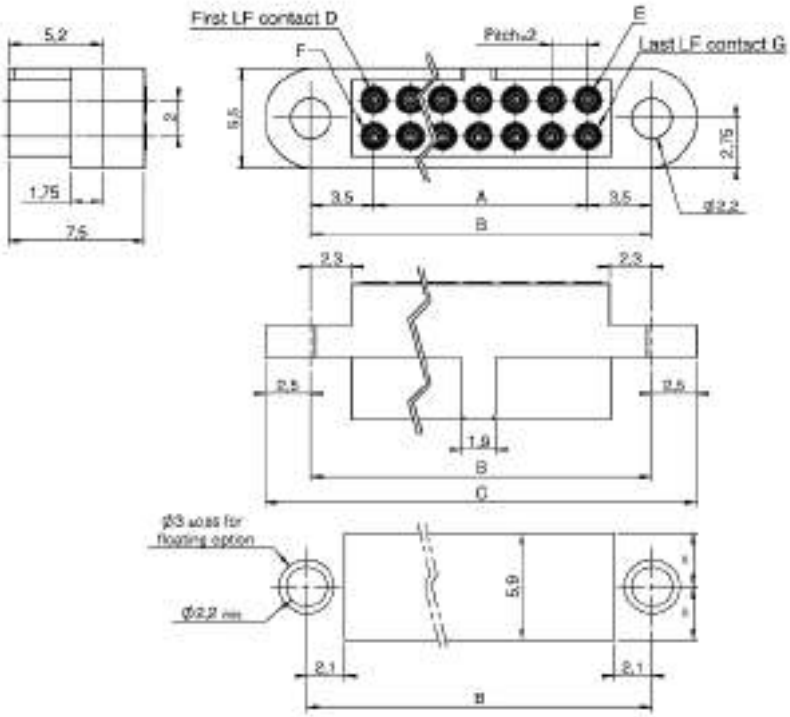

Ref : C13064-P
Female crimp contact "C"
for AWG 22 cable

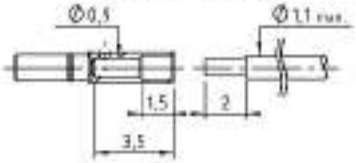

Ref : C12468
Female crimp contact "S"
for AWG 24-28

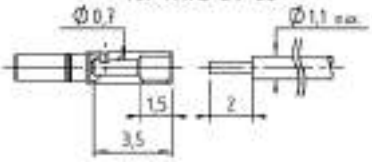

CMM 220 mixed-layout

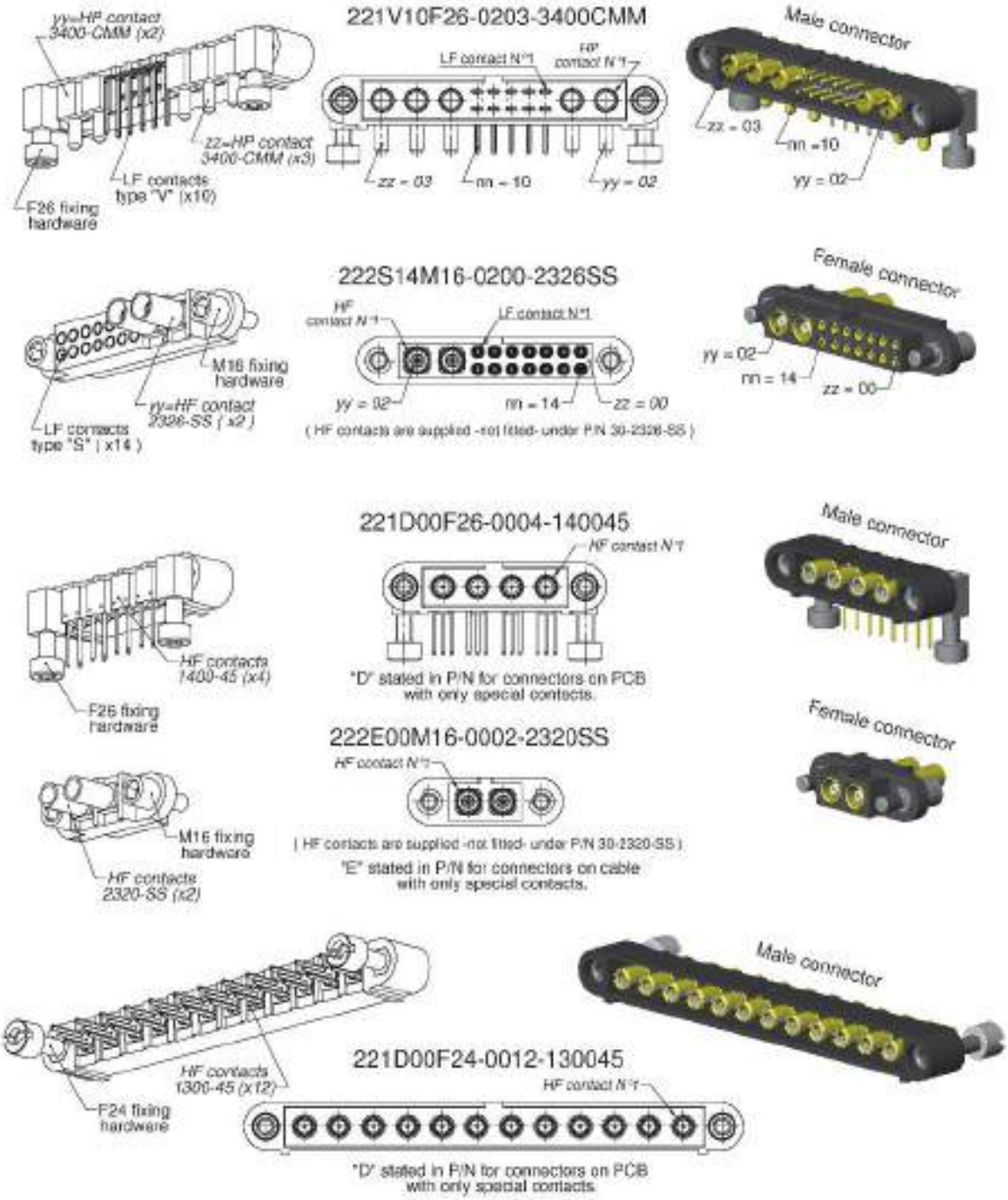

PART NUMBERING REMINDER

	Code with Low Frequency contacts only					Additional code for mixed-layout connector (HF/HP)		
	Series	Gender	Termination Style	Number of LF contacts	Fixing Hardware	Number of HF/HP contacts pin 1 side (LF contact number 1)	Number of HF/HP contacts opposite to LF contact number 1	HF/HP Contact Type
	■■	■	■	n n	■■■■ –	y y	z z –	■■■■ ■■■
2 rows	22	1 male 2 female	Refer to table on page 7	04 to 60	Refer to pages 43 to 46	Depends upon the number of LF contacts If use with shifted central key, please refer to page 42 HF / HP : 15 contacts max. Type of HF/HP contact : please refer to pages 8-9		HP/HF 30 please refer to pages 75 to 94

CMM 220
Male mixed-layout

STRAIGHT PCB

Part numbering :

Number of contacts LF pin 1 side

Number of contacts opposite side LF pin 1

2 2 1 n n - y y z z -

Type : Y-YL

See Fixing on page 43, 44 "Fxx" without fixing

HF or HP P/N refer to page 75

nn = number of LF contacts

Type	L
Y	3
YL	4,5

Pattern for special contact :

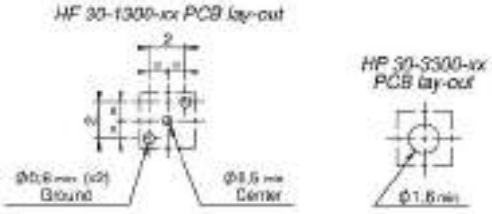

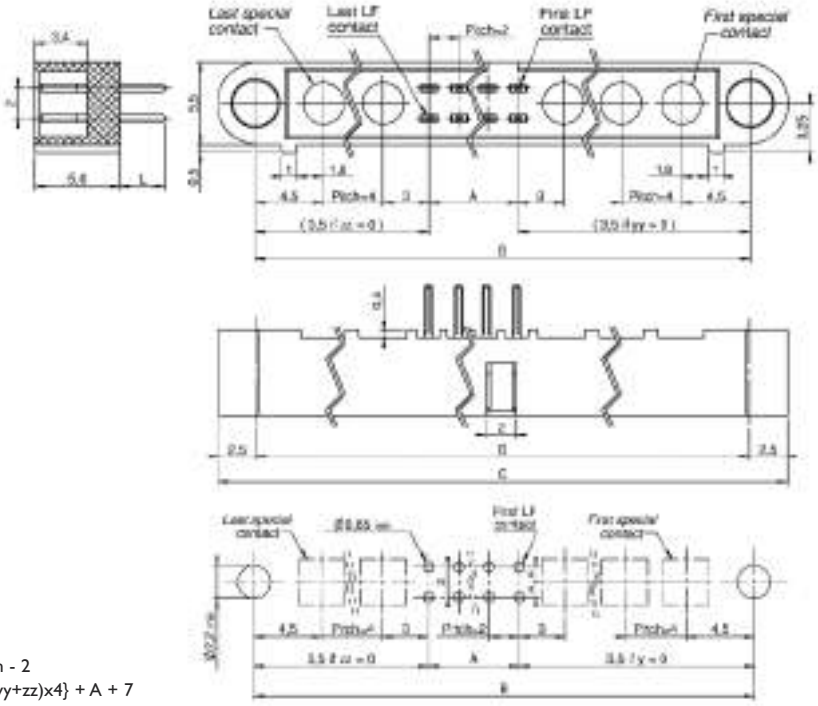

A = nn - 2
B = {(yy+zz)x4} + A + 7
Bmax. = 65 mm
C = B + 5

STRAIGHT PCB FOR HP/HF CONTACTS ONLY

Part numbering :

Number of HF or HP contacts

2 2 1 D 0 0 - 0 0 z z -

See Fixing on page 43, 44 "Fxx" without fixing

HF or HP P/N refer to page 75

Pattern for special contact :

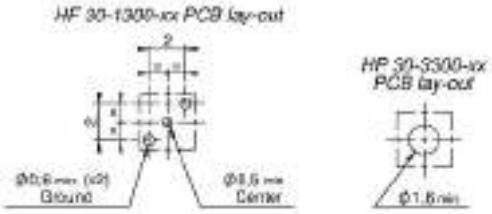

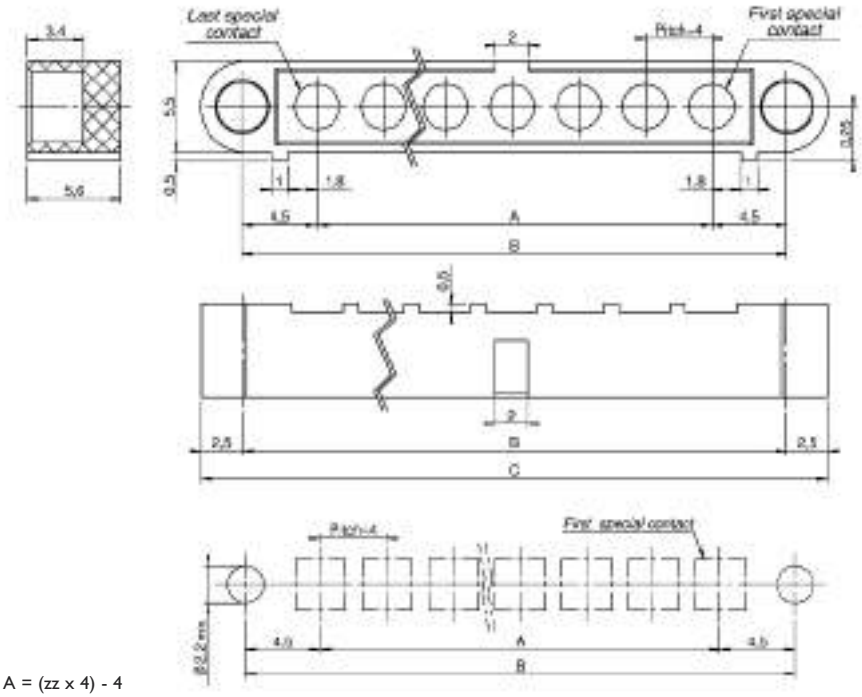

A = (zz x 4) - 4
B = A + 9
C = B + 5

Refer to dimension table on cover page

Special contacts min. : 02
max. : 15

CMM 220
Male mixed-layout

90° PCB

Part numbering :

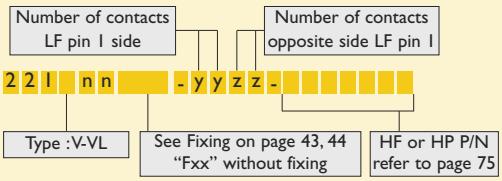

nn = number of LF contacts

Type	L
V	3
VL	4,5

Pattern for special contact :

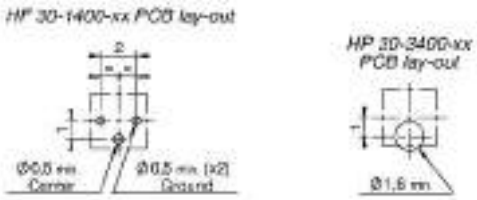

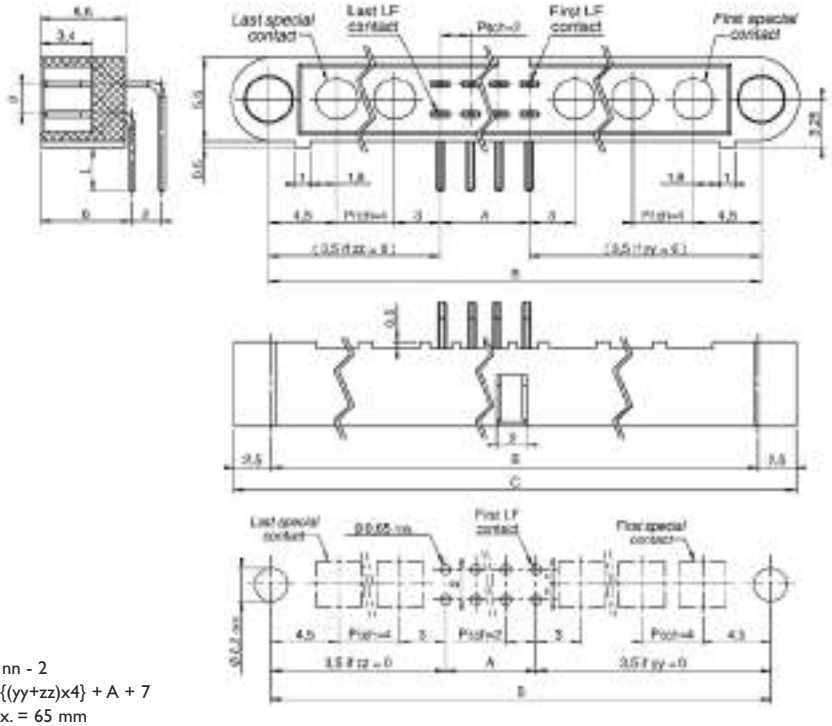

A = nn - 2
B = {(yy+zz)x4} + A + 7
Bmax. = 65 mm
C = B + 5

90° PCB FOR HP/HF CONTACTS ONLY

Part numbering :

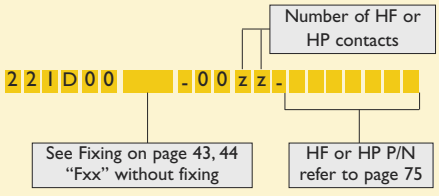

Pattern for special contact :

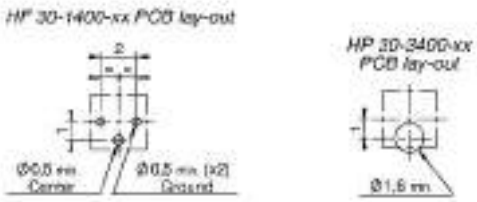

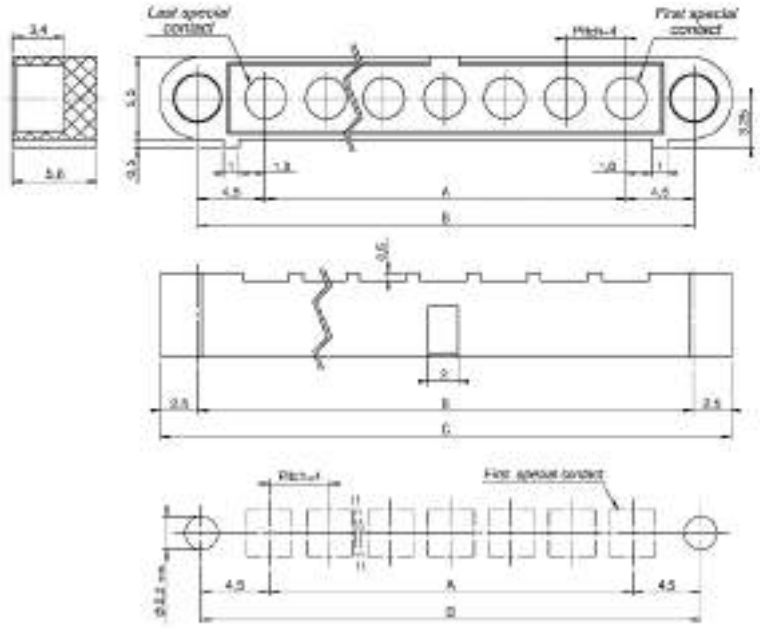

A = (zz x 4) - 4
B = A + 9
C = B + 5

Refer to sizes information table on cover page

Special contacts min. : 02
max. : 15

CMM 220
Male mixed-layout

CRIMP

Part numbering :

Number of contacts LF pin 1 side			Number of contacts opposite side LF pin 1										
2	2	I	n	n		-	y	y	z	z	-		
Type : S-C			See Fixing on page 43, 44 "Fxx" without fixing								HF or HP P/N refer to page 75		

nn = number of LF contacts

Type	Gauge
S	24-28
C	22

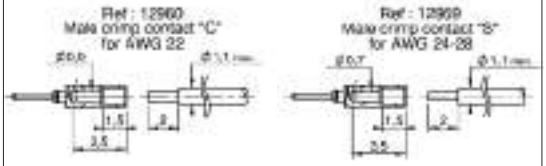

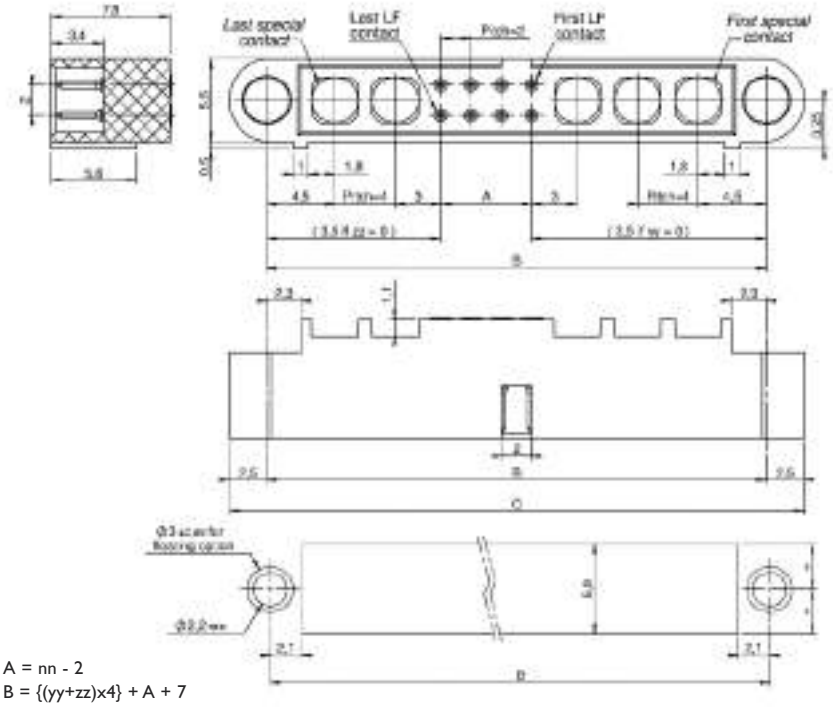

A = nn - 2
B = {(yy+zz)x4} + A + 7
Bmax. = 65 mm
C = B + 5

CRIMP FOR HP/HF CONTACTS ONLY

Part numbering :

Number of HF or HP contacts													
2	2	I	E	0	0		-	0	0	z	z	-	
See Fixing on page 43, 44 "Fxx" without fixing										HF or HP P/N refer to page 75			

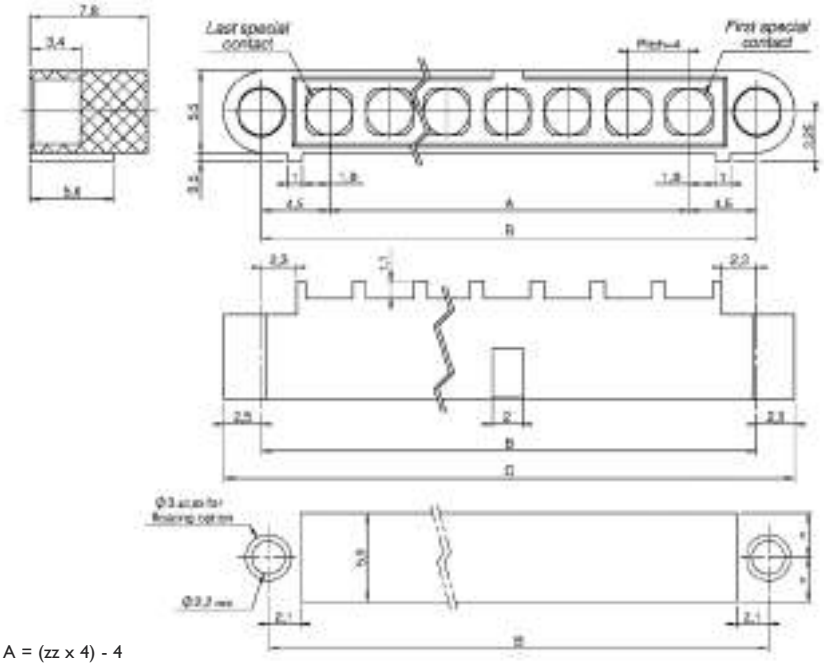

A = (zz x 4) - 4
B = A + 9
C = B + 5

Special contacts min. : 02
max. : 15

Refer to dimension table on cover page

CMM 220
Female mixed-layout

STRAIGHT PCB

Part numbering :

Number of contacts LF pin 1 side			Number of contacts opposite side LF pin 1										
2	2	2	n	n		-	y	y	z	z	-		

Type :Y-YL

See Fixing on page 45 "Mxx" without fixing

HF or HP P/N refer to page 75

nn = number of LF contacts

Type	L
Y	3
YL	4,5

Pattern for special contact :

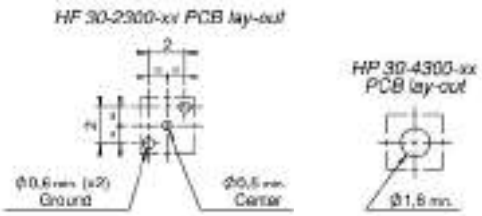

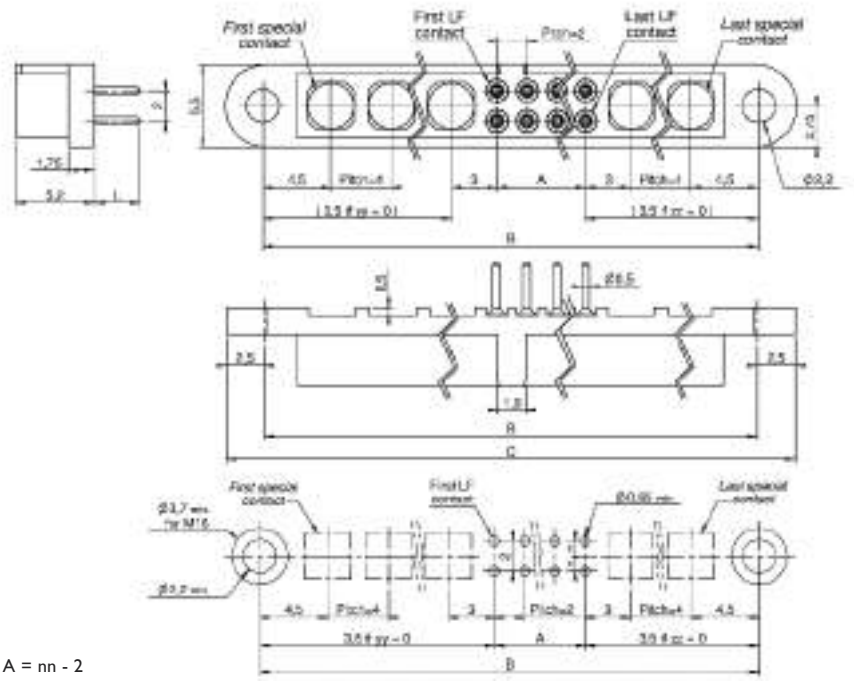

A = nn - 2
B = {(yy+zz)x4} + A + 7
Bmax. = 65 mm
C = B + 5

STRAIGHT PCB FOR HP/HF CONTACTS ONLY

Part numbering :

Number of HF or HP contacts													
2	2	2	D	0	0		-	0	0	z	z	-	

See Fixing on page 45 "Mxx" without fixing

HF or HP P/N refer to page 75

Pattern for special contact :

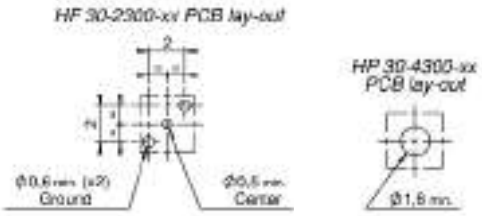

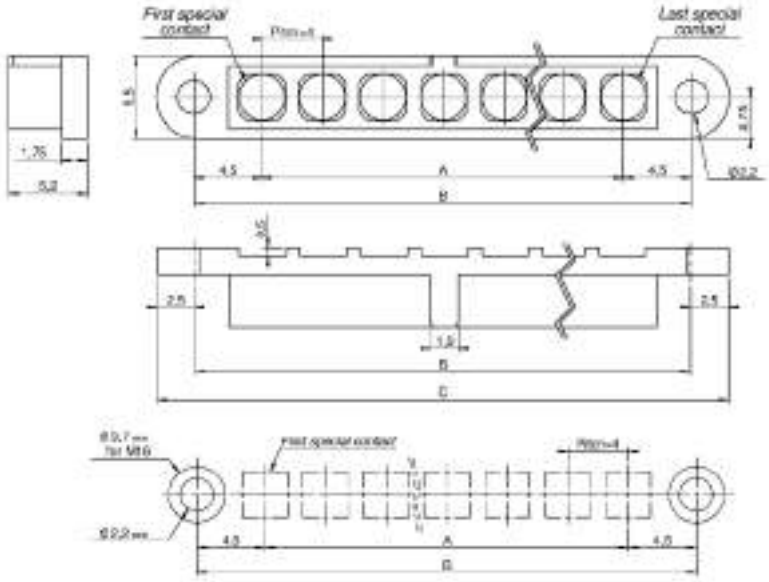

Special contacts min. : 02
max. : 15

A = (zz x 4) - 4
B = A + 9
C = B + 5

Refer to dimension table on cover page

CMM 220
Female mixed-layout

90° PCB

Part numbering :

Number of contacts LF pin 1 side		Number of contacts opposite side LF pin 1										
2	2	2	n	n		-	y	y	z	z	-	

Type : V-VL

See Fixing on page 45 "Mxx" without fixing

HF or HP P/N refer to page 75

nn = number of LF contacts

Type	L
V	3
VL	4,5

Pattern for special contact :

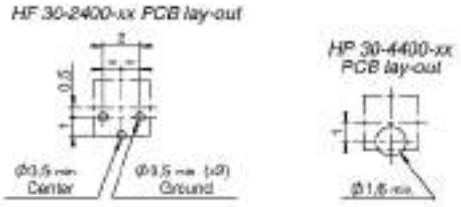

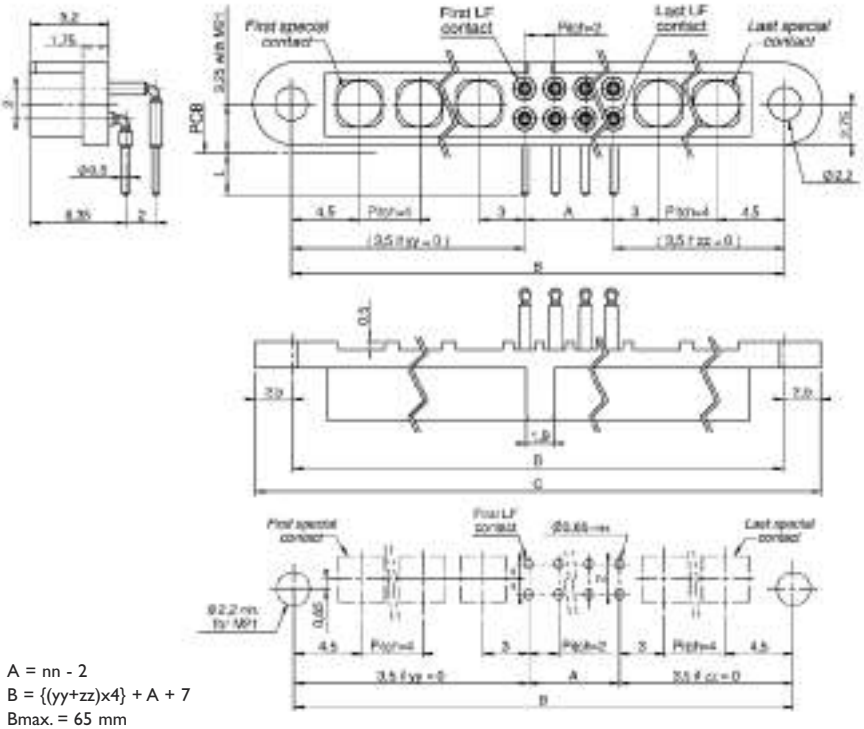

A = nn - 2
B = {(yy+zz)x4} + A + 7
Bmax. = 65 mm
C = B + 5

90° PCB FOR HP/HF CONTACTS ONLY

Part numbering :

Number of HF or HP contacts												
2	2	2	D	0	0		-	0	0	z	z	-

See Fixing on page 45 "Mxx" without fixing

HF or HP P/N refer to page 75

Pattern for special contact :

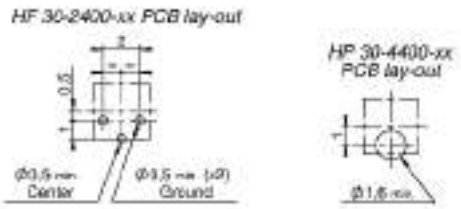

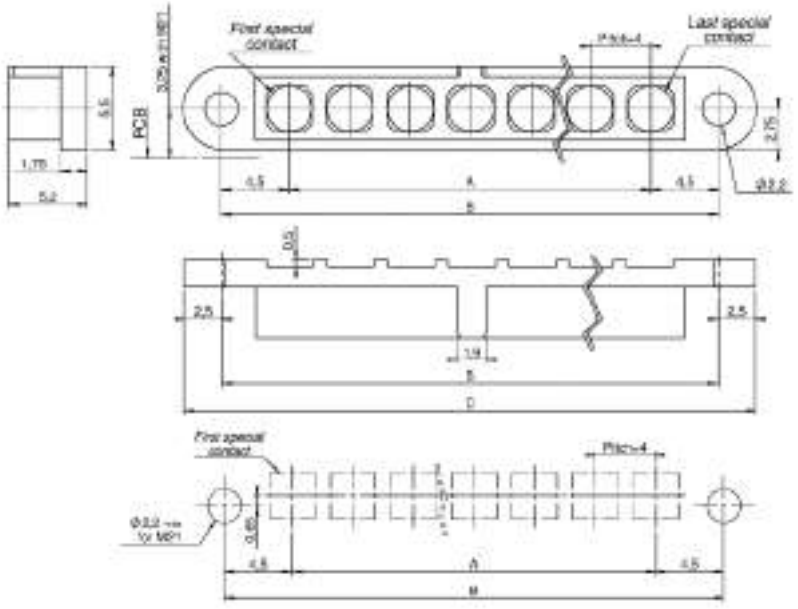

Special contacts min. : 02
max. : 15

A = (zz x 4) - 4
B = A + 9
C = B + 5

Refer to dimension table on cover page

CMM 220
Female mixed-layout

CRIMP

Part numbering :

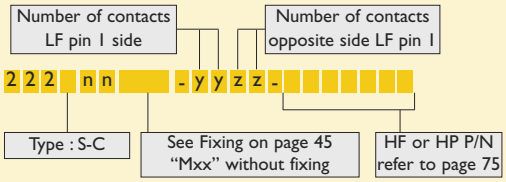

nn = number of LF contacts

Type	Gauge
S	24-28
C	22

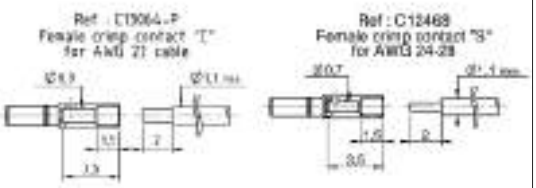

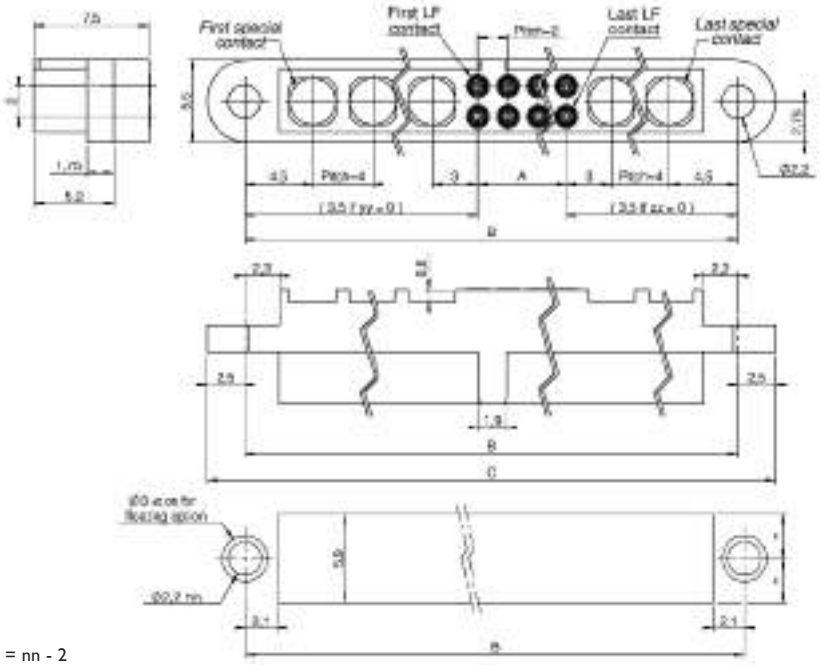

A = nn - 2
B = {(yy+zz)x4} + A + 7
Bmax. = 65 mm
C = B + 5

CRIMP FOR HP/HF CONTACTS ONLY

Part numbering :

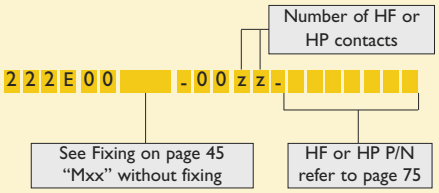

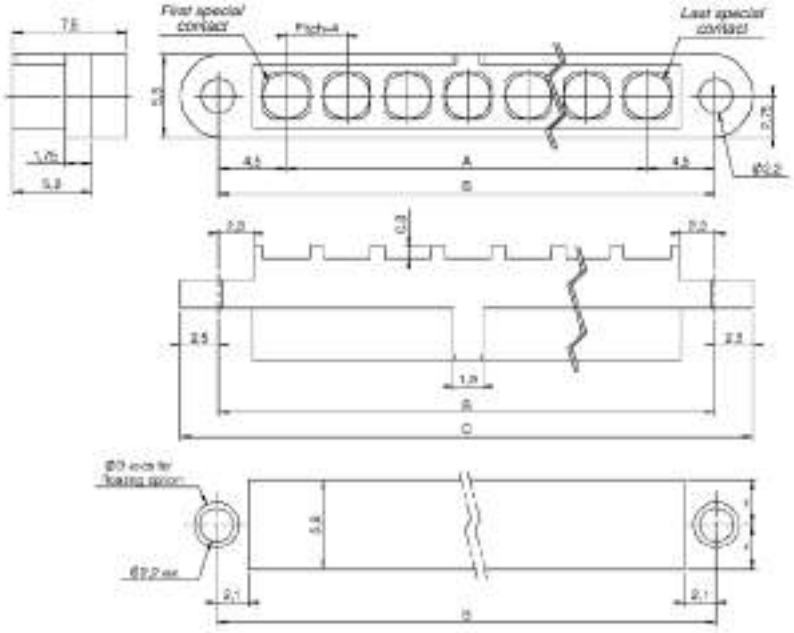

A = (zz x 4) - 4
B = A + 9
C = B + 5

Refer to dimension table on cover page

Special contacts min. : 02
max. : 15

Part numbering with shifted polarization key position

PART NUMBERING

Digits to be added

2 2 _ _ n n _ - y y z z - _ _ _ _ _ _ - k l l

Number of LF contacts
nn min. = 06

Polarized key direction shifted
from the housing center
(k = 1 direction of contact LF number 1)
(k = 2 opposite direction to LF contact number 1)

Polarized key shift
value compared
to the housing center
(each shift = 2 mm)

EXPLANATION

Shown looking onto mating face (Example with Male housing)

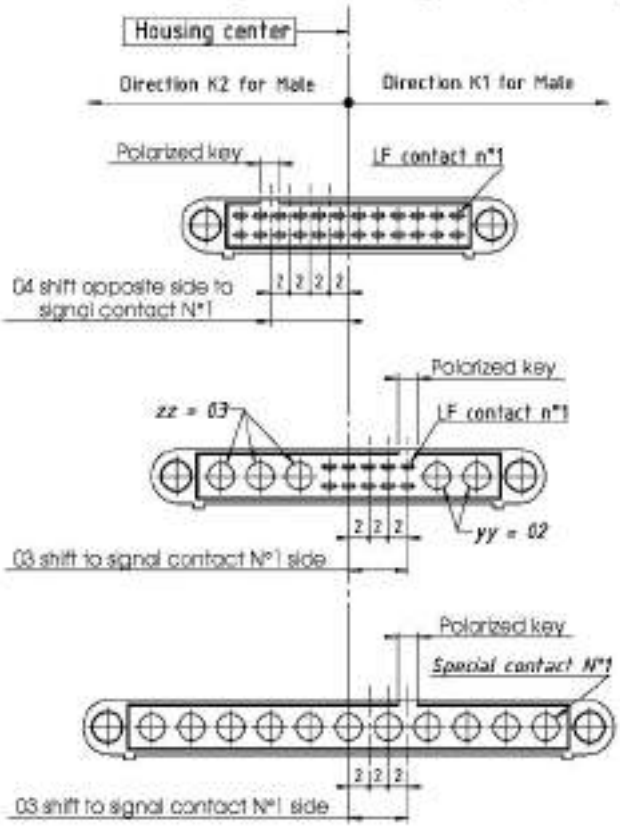

CMM220 with LF contacts only with shifted polarized key.

Example : 2 2 1 _ 2 4 Fxx - 2 0 4

CMM220 with LF contacts and Special contacts with shifted polarized key.

Example : 2 2 1 _ 1 0 Fxx - 0 2 0 3 - _ _ _ _ _ _ _ - 1 0 3

CMM220 with Special contacts only with shifted polarized key.

Example : 2 2 1 _ 0 0 Fxx - 0 0 1 1 - _ _ _ _ _ _ _ - 1 0 3

EXAMPLES

Connectors Male & Female CMM series 220
LF and special contacts mixed

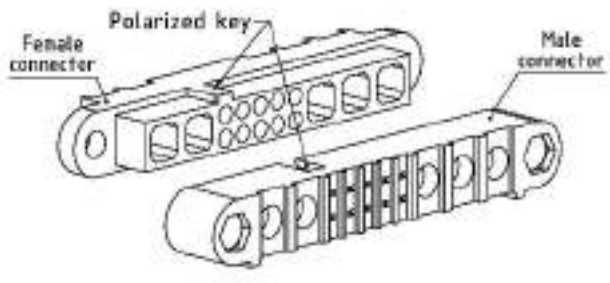

Male : 2 2 1 _ 1 0 Fxx - 0 2 0 3 - _ _ _ _ _ _ _ - 1 0 3
Female : 2 2 2 _ 1 0 Mxx - 0 2 0 3 - _ _ _ _ _ _ _ - 1 0 3

Connectors Male & Female CMM series 220
special contacts only

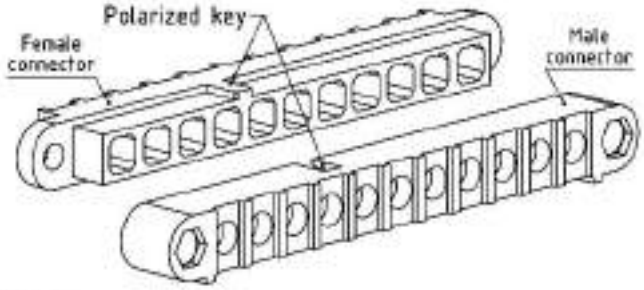

Male : 2 2 1 _ 0 0 Fxx - 0 0 1 1 - _ _ _ _ _ _ _ - 1 0 3
Female : 2 2 2 _ 0 0 Mxx - 0 0 1 1 - _ _ _ _ _ _ _ - 1 0 3

Fixing hardware interconnection table for CMM 220

Male Connectors CMM series 220

Female Connectors CMM series 220

Type of contact in connector				PCB Contacts																Contacts on cable															
		Type of PCB mount		Straight			90°													Straight			90°													
	Housing assembly	PCB thickness (mm)		0,8 min. 2 max.	1,5 min. 4 max.	6 max.	4 max.		2,5 max.	4,5 max.	1,6 max.	3,2 max.	Card edge only HF	Card edge HF & LF	No fixing on PCB			Racking		0,8 min 2 max	1,5 min 4 max	6 max	4 max		2,5 max	4,5 max	1,6 max	3,2 max	Floating		No fixing on PCB		Racking	With cover	
			Fixing	F22 F22H	F24 F24H	F24L	F25	F26 F23	F30 F30H	F31 F31H	F63	F63L	F27	F34	F21	F60	F61	F62 F62H		F22	F24	F24L	F25	F26 F23	F30 F30H	F31 F31H	F63	F63L	F2xx	F21	F60	F61	F62	F28	
PCB Contacts	Smooth	Straight	0,8 min. 2 max.	M12	OK	OK	OK	OK	OK	OK	OK			OK	OK	OK			OK	OK	OK	OK	OK	OK	OK	OK			OK	OK			OK	OK	
				M12H	OK	OK	OK	OK	OK	OK	OK			OK	OK	OK			OK	OK	OK	OK	OK	OK	OK	OK			OK	OK			OK	OK	
			1,5 min. 4 max.	M12L	OK	OK	OK	OK	OK	OK	OK			OK	OK	OK			OK	OK	OK	OK	OK	OK	OK	OK			OK	OK			OK	OK	
				M12LH	OK	OK	OK	OK	OK	OK	OK			OK	OK	OK			OK	OK	OK	OK	OK	OK	OK	OK			OK	OK			OK	OK	
				M49														OK															OK		
				M49H														OK															OK		
	Locked	Straight	1,5 min. 2,5 max.	M46								OK	OK				OK										OK	OK			OK				
				M46H								OK	OK				OK										OK	OK			OK				
			1,5 min. 4 max.	M47								OK	OK				OK										OK	OK			OK				
				M47H								OK	OK				OK										OK	OK			OK				
		90°	1,6	M21	OK	OK	OK		A	A	A									OK	OK	OK		A	A	A			OK	OK				B	
			3,2	M21L	OK	OK	OK		A	A	A									OK	OK	OK		A	A	A			OK	OK				B	
			1,6	M48													OK															OK			
			2	M48M													OK															OK			
			3,2	M48L													OK															OK			
		Without		M16 / M11	OK	OK	OK		OK	OK	OK			OK	OK	OK				OK	OK	OK		OK	OK	OK			OK	OK				OK	
	Smooth	Straight	0,8 min. 2 max.	M12	OK	OK	OK	OK	OK	OK	OK			OK	OK	OK			OK	OK	OK	OK	OK	OK	OK	OK			OK	OK			OK	OK	
			1,5 min. 4 max.	M12L	OK	OK	OK	OK	OK	OK	OK			OK	OK	OK			OK	OK	OK	OK	OK	OK	OK	OK			OK	OK			OK	OK	
				M49														OK															OK		
		Floating		M1xx	OK	OK	OK	OK	OK	OK	OK			OK	OK	OK			OK	OK	OK	OK	OK	OK	OK	OK			OK	OK			OK	OK	
	Locked	Straight	1,5 min. 2,5 max.	M46								OK	OK				OK										OK	OK			OK				
			1,5 min. 4 max.	M47								OK	OK				OK										OK	OK			OK				
		90°	1,6	M21	OK	OK	OK		A	A	A									OK	OK	OK		A	A	A			OK	OK				B	
			3,2	M21L	OK	OK	OK		A	A	A									OK	OK	OK		A	A	A			OK	OK				B	
			1,6	M48													OK															OK			
			2	M48M													OK															OK			
			3,2	M48L													OK															OK			
		Without		M16 / M11	OK	OK	OK		OK	OK	OK			OK	OK	OK				OK	OK	OK		OK	OK	OK			OK	OK				OK	
		With cover		M18	OK	OK	OK		B	B	B			OK	OK	OK				OK	OK	OK		B	B	B			OK	OK				OK	

Make it a habit! Use easy & automatic configurators for CMM micro-connectors single part and mating-half construction on **www.nicomatic.com**.

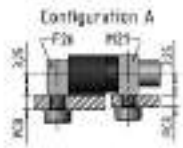

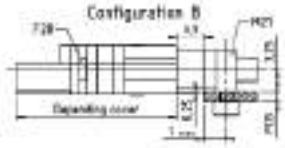

Recommended Torque : 0,2 N/m
Except 0,4 N/m for M46/M47

FIXING HARDWARE FOR CMM 220 MALE

Reference	Assembly on PCB	Overall dimensions	Recommendation
F27		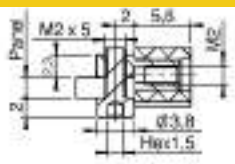	**F27 :** CMM male : **Card edge** for HF contact **30-1500-CMM**
F34		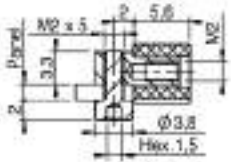	**F34 :** CMM male : **Card edge** LF contact or mixed
F28		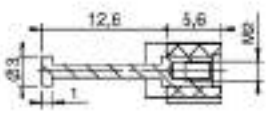	**F28 :** CMM male : **S-C** (E : straight)

Please refer to the CMM Catalogue Guidelines for any other fixing not listed here.

Fixing for CMM 220 male

FIXING HARDWARE FOR CMM 220 MALE

Reference	Assembly on PCB	Overall dimensions	Recommendation
F21	**Straight on PCB**	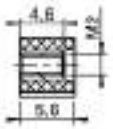	**F21 :** CMM male : **Y-YL-T-S-C** (D-E : straight)
F22 **F22H**	**Straight on PCB 0,8 min / 2 max**	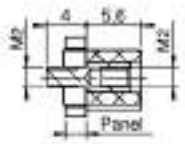	**F22 :** CMM male : **Y-T-S-C** (D-E : straight) **F22H :** CMM male : **Y-T** (D : straight)
F24 **F24H**	**Straight on PCB 1,5 min / 4 max**	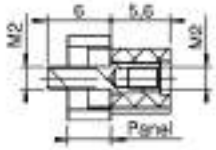	**F24 :** CMM male : **YL-T-S-C** (D-E : straight) **F24H :** CMM male : **YL-T** (D : straight)
F24L	**Straight on PCB 6 max**	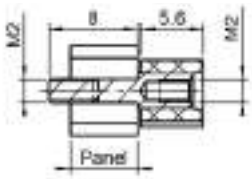	**F24L :** CMM male : **T-TL** (D-E : straight)
F2xx **xx =** (PCB thickness + 0,2 mm) x 10 Example : for 3 mm PCB, the reference is **F232** (3 + 0,2) x 10 = 32 **xx =** 32	**Straight on PCB with floating option**	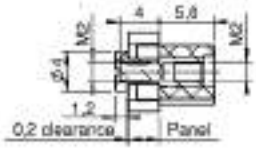	**F2xx :** CMM male : **S-C** (E : straight)
F25	**90° on PCB**	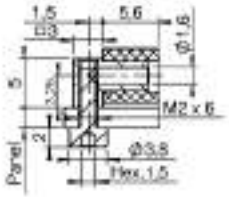	**F25 :** CMM male : **V-VL-R-S-C-E** (D : 90°)
F26 **F23**	**90° on PCB**	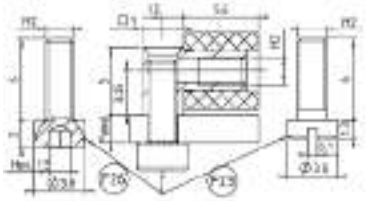	**F26/F23 :** CMM male : **V-VL-R-S-C-E** (D : 90°)
F30 **F30H**	**90° on PCB 2,5 max.**	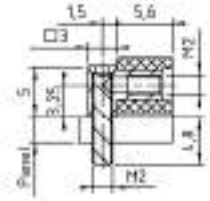	**F30 & F30H: CMM male : V-R-C-S-E (D : 90°)**
F31 **F31H**	**90° on PCB 4,5 max.**	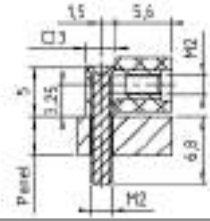	**F31 & F31H:** CMM male : **VL-R-C-S-E** (D : 90°)

Please refer to the CMM Catalogue Guidelines for any other fixing not listed here.

Fixing for CMM 220 female

FIXING HARDWARE FOR CMM 220 FEMALE

HEXAGONAL NUT	STANDARD NUT	"W" CODE FOR ADDITIONAL WASHER
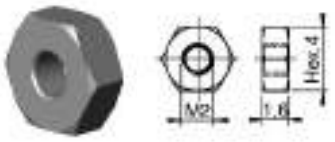	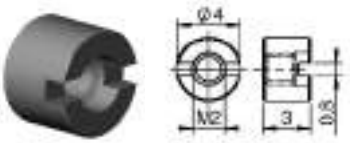	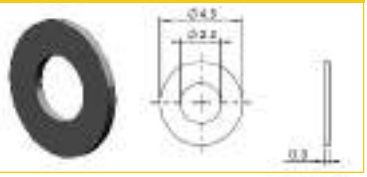

REFERENCE	ASSEMBLY ON PCB	OVERALL DIMENSIONS	RECOMMENDATION
M16 **M11**	**Straight on PCB** 	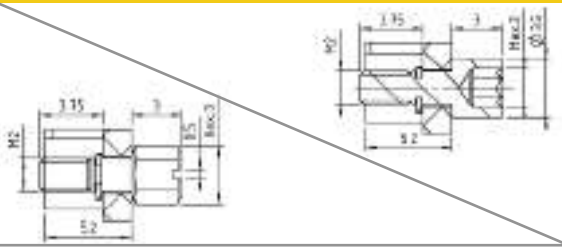	**M16/M11 :** CMM Female : **Y-YL-T-S-C-E** (D : straight)
M12 **M12H** 	**Straight on PCB 0,8 min / 2 max** 	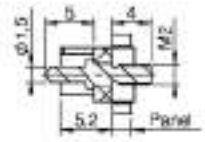	**M12 :** CMM female : **Y-T-S-C** (D-E : straight) **M12H :** CMM female : **Y-T** (D : straight)
M12L **M12LH** 	**Straight on PCB 1,5 min / 4 max** 	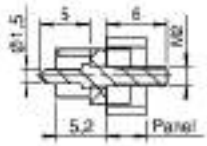	**M12L :** CMM female : **Y-T-S-C** (D-E : straight) **M12LH :** CMM female : **YL-T** (D : straight)
M1xx **xx =** (PCB thickness + 0,2 mm) x 10 Example : for 3 mm PCB, the reference is **M132** (3 + 0,2) x 10 = 32 **xx =** 32	**Straight on PCB with floating option** 	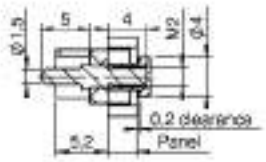	**M1xx :** CMM female : **S-C** (E : straight)
M21 for PCB 1,6 mm (L = 4 mm) **M21L** for PCB 3,2 mm (L = 5 mm)	**90° on PCB** 	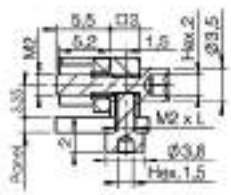	**M21 :** CMM Female : **V-R-S-C-E** (D : 90°) **M21L :** CMM Female : **VL-R-S-C-E** (D : 90°)
M18	**Cover option** 	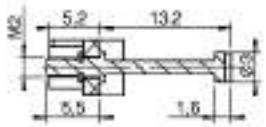	**M18 :** CMM female : **S-C** (E : straight)

Please refer to the CMM Catalogue Guidelines for any other fixing not listed here.

Other fixing hardware for CMM 220

FIXING HARDWARE FOR CMM 220 FEMALE/MALE

Reference	Assembly on PCB	Overall dimensions	Recommendation
M46	**Straight on PCB 1,5 min. / 2,5 max.**	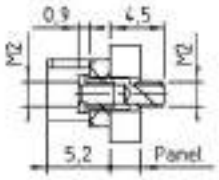	**M46 :** CMM female : **Y-T-S-C** (D-E : straight) **M46H :** CMM female : **Y-T** (D : straight)
M46H			
M47	**Straight on PCB 1,5 min. / 4 max.**	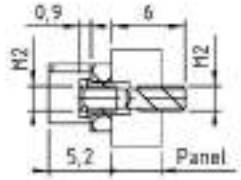	**M47 :** CMM female : **YL-T-S-C** (D-E : straight) **M47H :** CMM female : **YL-T** (D : straight)
M47H			
M48 for PCB 1,6 mm (L = 3 mm)	**90° on PCB**	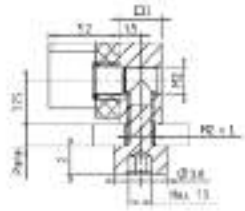	**M48 / M48M / M48L :** CMM female : **V-VL-R-S-C-E** (D : 90°)
M48M for PCB 2 mm (L = 4 mm)			
M48L for PCB 3,2 mm (L = 5 mm)			
M49	**Straight on PCB**	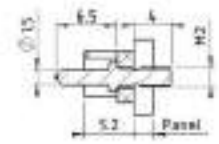	**M49 : CMM** female : **Y-T-S-C** (D-E : straight) **M49H : CMM** female : **Y-T** (D : straight)
M49H			
F60	**Straight on PCB**	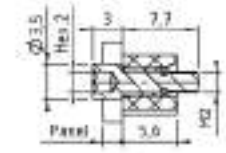	**F60 : CMM** male : **Y-YL-T-S-C-E** (D : straight)
F61	**Straight on PCB**	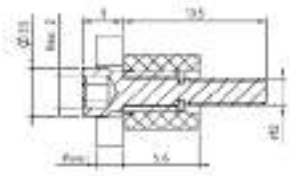	**F61 :** CMM male : **Y-YL-T-S-C-E** (D : straight)
F62	**Racking**	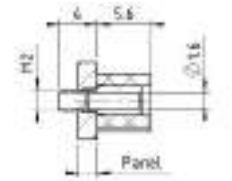	**F62 : CMM** male : **Y-T-S-C** (D-E : straight) **F62H : CMM** male : **Y-T** (D : straight)
F62H			
F63 for PCB 1,6 mm / **F63L** for PCB 3,2 mm	**90° on PCB** 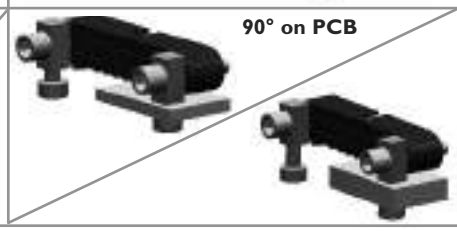	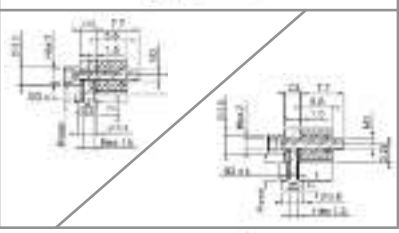	**F63 : CMM** male : **V-R-S-C-E** (D : 90°) **F63L : CMM** male : **VL-R-S-C-E** (D : 90°)

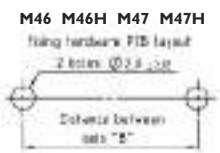

CMM 320 with LF contacts

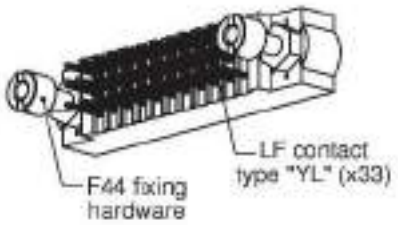

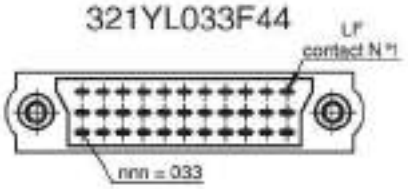

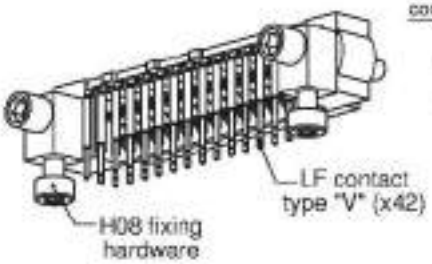

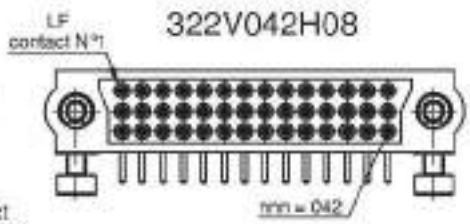

PART NUMBERING REMINDER

Code with Low Frequency contacts only					
	Series	Gender	Termination Style	Number of LF contacts	Fixing Hardware
				n n n	
3 rows	32	1 male 2 female	Refer to table on page 7	006 to 120	Refer to pages 69 to 74

CMM 320
Configuration

CONNECTOR SPACING

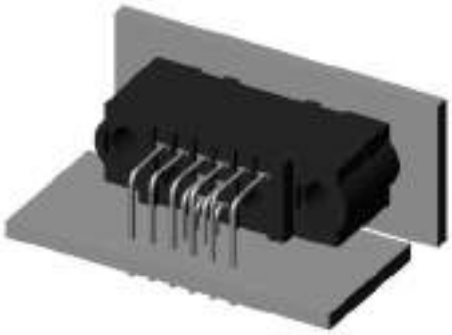

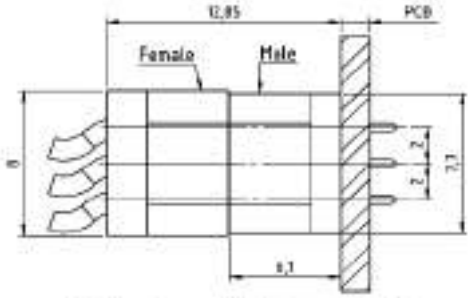

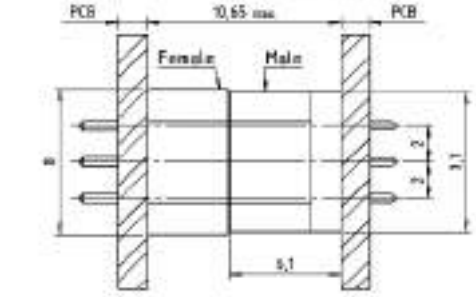

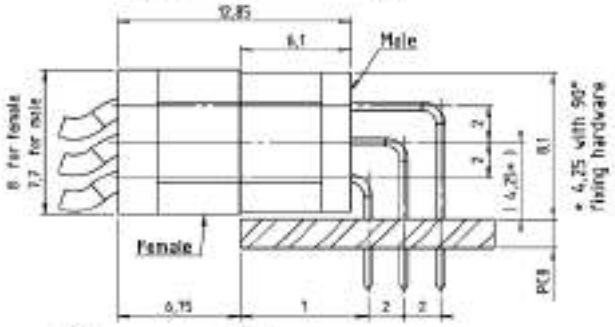

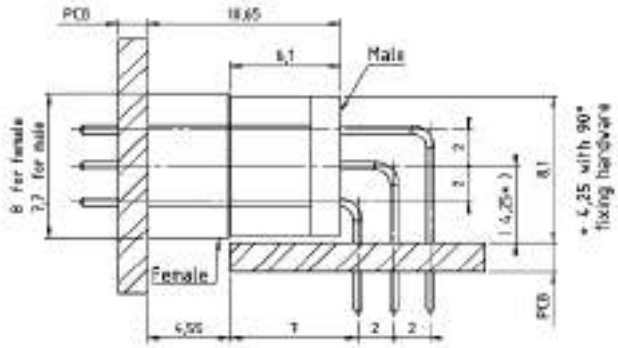

CONTACTS POSITIONS

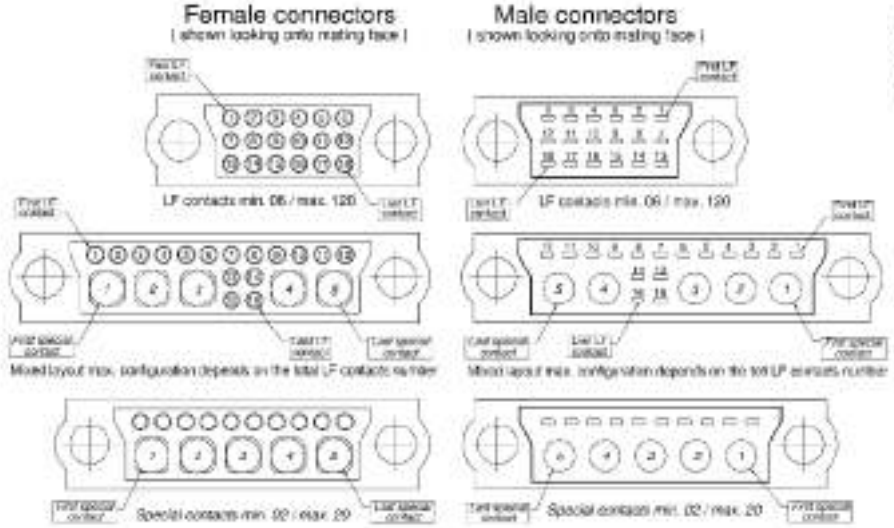

CMM 320 Male

STRAIGHT PCB FOR LF CONTACTS ONLY

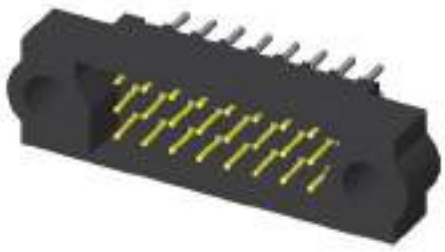

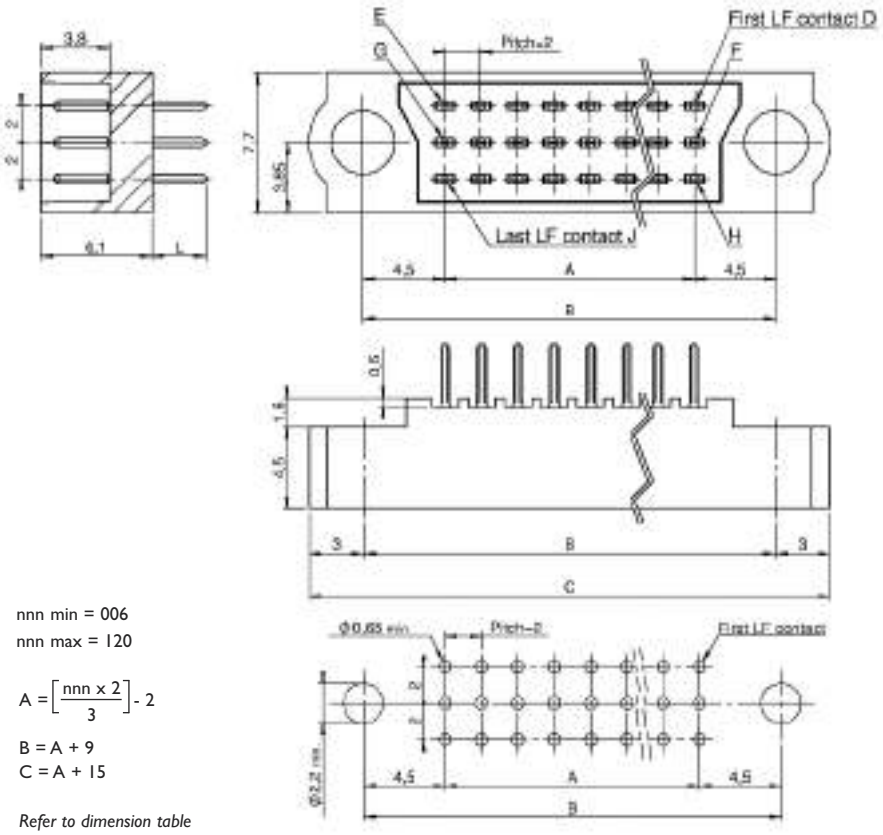

Part numbering :

Type : Y-YL

3 2 1 _ n n n _

See Fixing on pages 69 to 74 "Fxx" without fixing

nnn = number of LF contacts

Type	L
Y	3
YL	4,5

nnn min = 006
nnn max = 120

$A = \left[\frac{nnn \times 2}{3}\right] - 2$

B = A + 9
C = A + 15

Refer to dimension table on cover page

90° PCB FOR LF CONTACTS ONLY

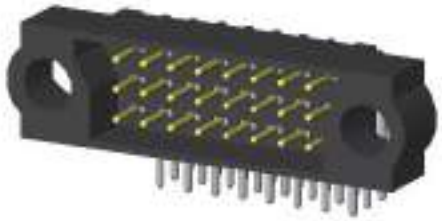

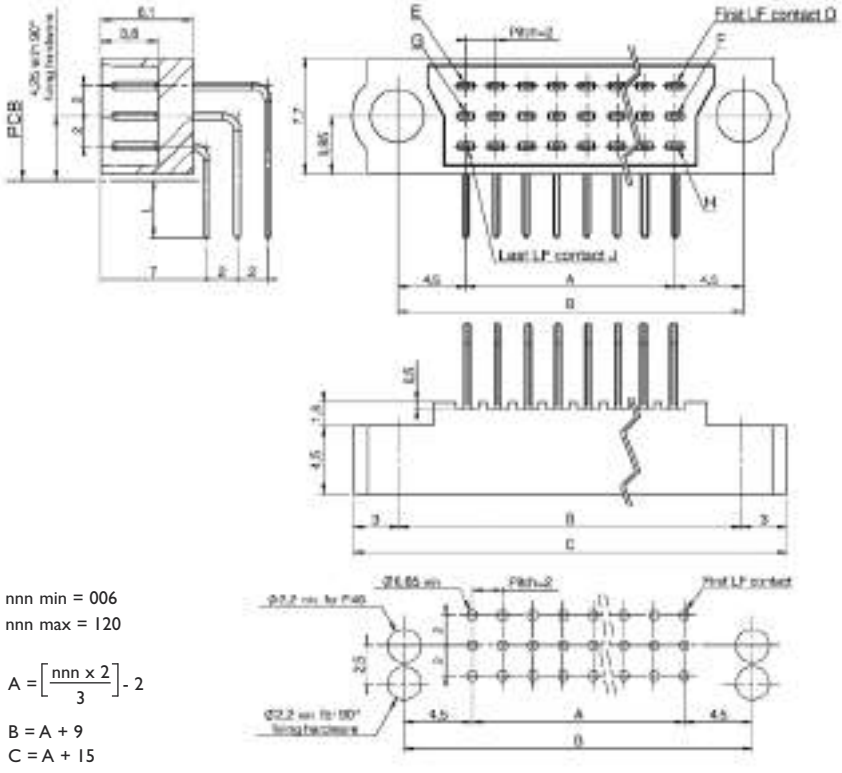

Part numbering :

Type : V-VL

3 2 1 _ n n n _

See Fixing on pages 69 to 74 "Fxx" without fixing

nnn = number of LF contacts

Type	L
V	3
VL	4,5

nnn min = 006
nnn max = 120

$A = \left[\frac{nnn \times 2}{3}\right] - 2$

B = A + 9
C = A + 15

Refer to dimension table on cover page

CMM 320 Male

90° SMT FOR LF CONTACTS ONLY

Part numbering :

3 2 I R n n n

See Fixing on pages 69 to 74
"Fxx" without fixing

nnn = number of LF contacts

Optional: Packaging in reel available upon request

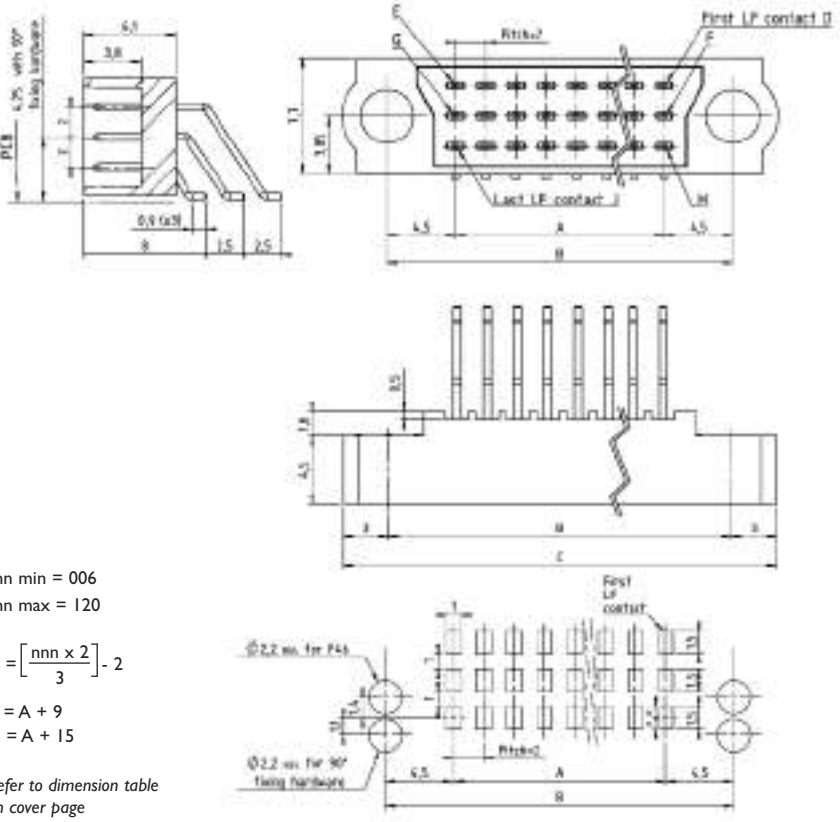

nnn min = 006
nnn max = 120

$A = \left[\frac{nnn \times 2}{3}\right] - 2$

B = A + 9
C = A + 15

Refer to dimension table on cover page

CRIMP FOR LF CONTACTS ONLY

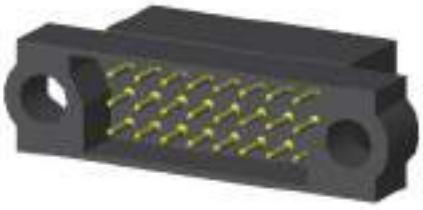

Part numbering :

Type : S-C

3 2 I n n n

See Fixing on pages 69 to 74
"Fxx" without fixing

nnn = number of LF contacts

Type	Gauge
S	24-28
C	22

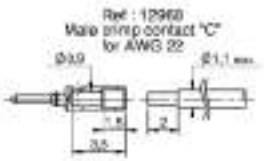

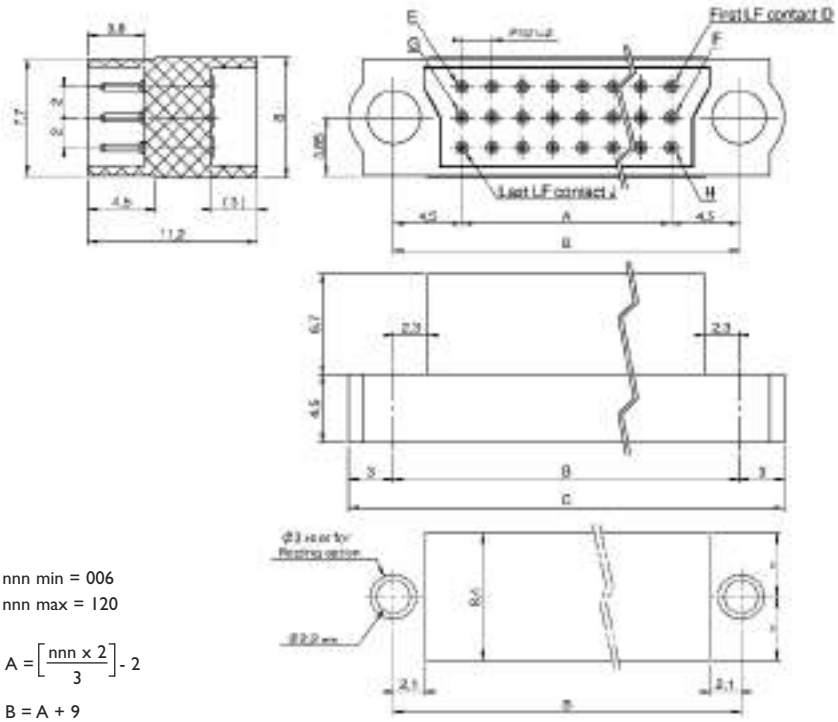

nnn min = 006
nnn max = 120

$A = \left[\frac{nnn \times 2}{3}\right] - 2$

B = A + 9
C = A + 15

Refer to dimension table on cover page

CMM 320 Female

STRAIGHT PCB FOR LF CONTACTS ONLY

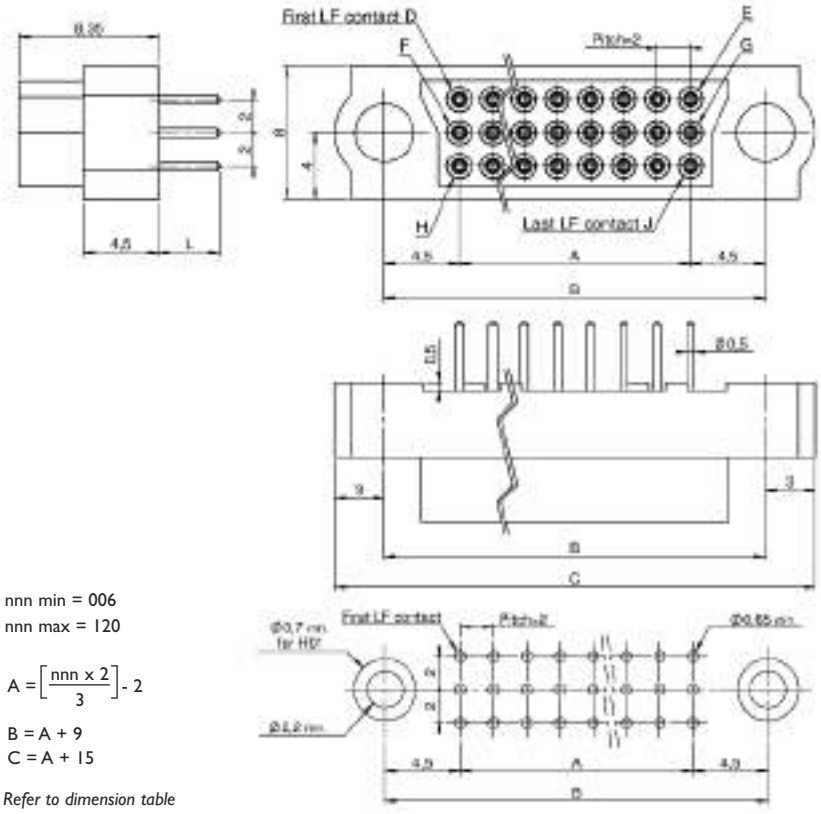

Part numbering :

Type : Y-YL

3 2 2 [ ] n n n [ ]

See Fixing on pages 69 to 74 "Mxx" without fixing

nnn = number of LF contacts

Type	L
Y	3
YL	4,5

nnn min = 006
nnn max = 120

$$A = \left[\frac{nnn \times 2}{3}\right] - 2$$

B = A + 9
C = A + 15

Refer to dimension table on cover page

90° PCB FOR LF CONTACTS ONLY

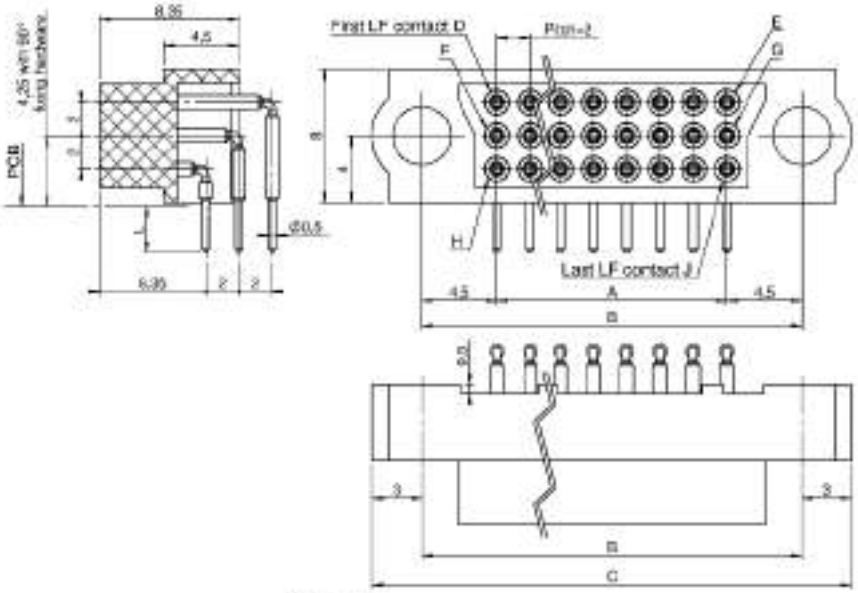

Part numbering :

Type : V-VL

3 2 2 [ ] n n n [ ]

See Fixing on pages 69 to 74 "Mxx" without fixing

nnn = number of LF contacts

Type	L
V	3
VL	4,5

nnn min = 006
nnn max = 120

$$A = \left[\frac{nnn \times 2}{3}\right] - 2$$

B = A + 9
C = A + 15

Refer to dimension table on cover page

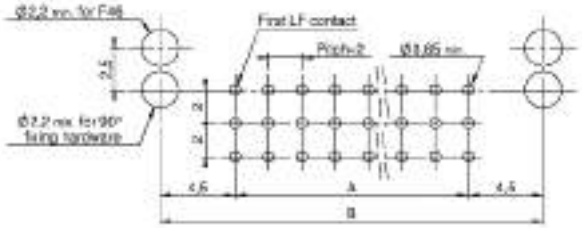

CMM 320 Female

CRIMP FOR LF CONTACTS ONLY

Part numbering :

Type : S-C

3 2 2 _ n n n _

See Fixing on pages 69 to 74 "Mxx" without fixing

nnn = number of LF contacts

Type	Gauge
S	24-28
C	22

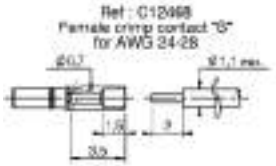

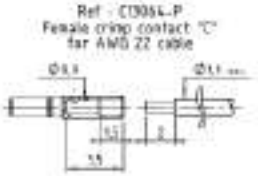

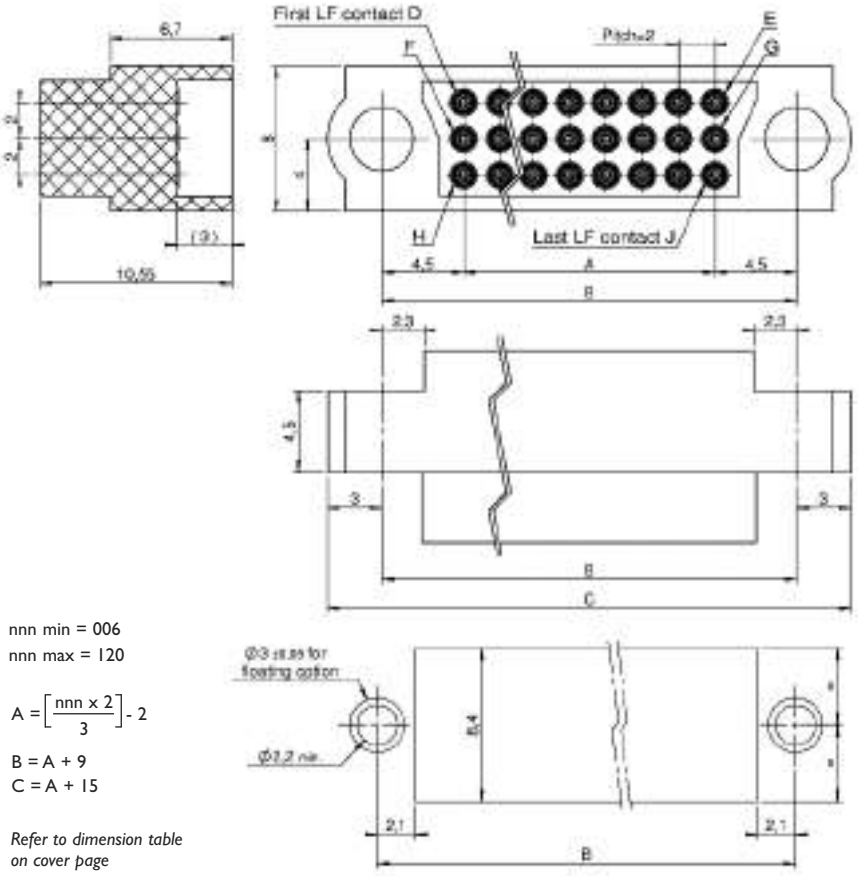

nnn min = 006
nnn max = 120

$$A = \left[\frac{nnn \times 2}{3}\right] - 2$$

B = A + 9
C = A + 15

Refer to dimension table on cover page

CMM 320 with mixed-layout

321YL016F44-0002-330045

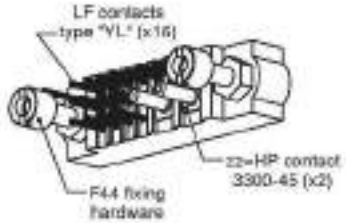

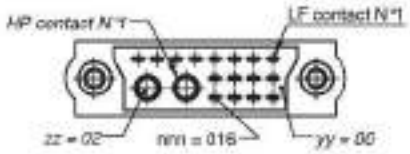

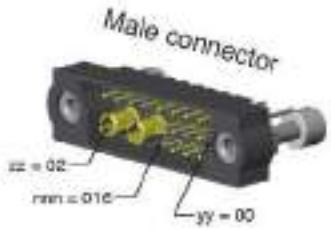

322YL020F45-0202-230014

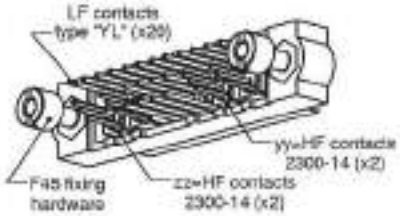

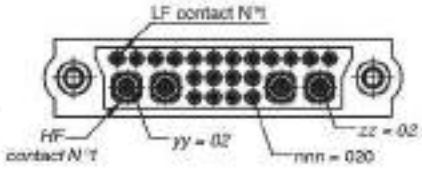

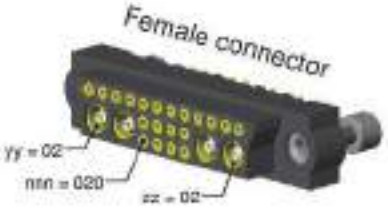

322S026H01-0400-2326SS

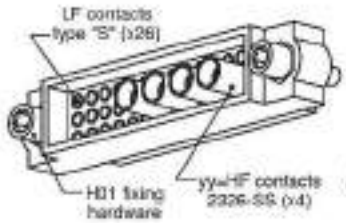

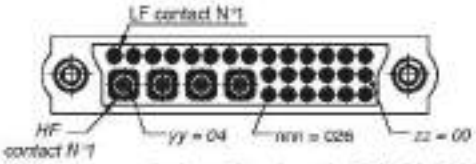

(HF contact are supplied -not fitted- under P/N 30-2326-SS)

321D000F42-0005-3300CMM

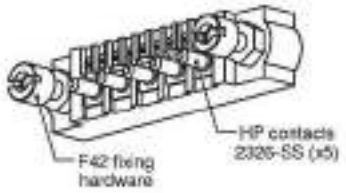

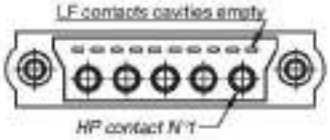

"D" stated in P/N for connectors on PCB
with only special contacts.

322E000H01-0007-2324SS

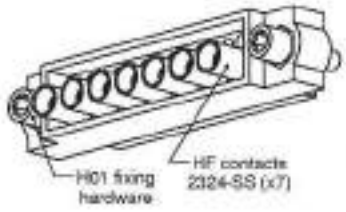

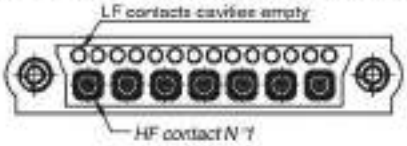

(HF contact are supplied -not fitted- under P/N 30-2324-SS)

"E" stated in P/N for connectors on cable
with only special contacts.

PART NUMBERING REMINDER

	Code with Low Frequency contacts only					Additional code for mixed-layout connector (HF/HP)		
	Series	Gender	Termination Style	Number of LF contacts	Fixing Hardware	Number of HF/HP contacts pin 1 side (LF contact number 1)	Number of HF/HP contacts opposite to LF contact number 1	HF/HP Contact Type
				n n n		– y y	z z –	
3 rows	32	1 male 2 female	Refer to table on page 7	006 to 120	Refer to pages 69 to 74	Depends upon the number of LF contacts HF / HP : 20 contacts max. Type of HF/HP contact : please refer to pages 8-9		HF/HP 30 please refer to pages 75 to 94

CMM 320
Male mixed-layout

STRAIGHT PCB

Part numbering :

Number of contacts LF pin 1 side — Number of contacts opposite side LF pin 1

3 2 1 n n n - y y z z -

Type : Y-YL — See Fixing on pages 69 to 74 "Fxx" without fixing — HF or HP P/N refer to page 75

nnn = number of LF contacts

Type	L
Y	3
YL	4,5

Pattern for special contact :

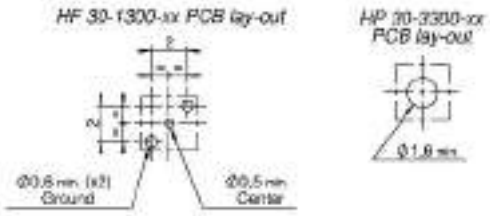

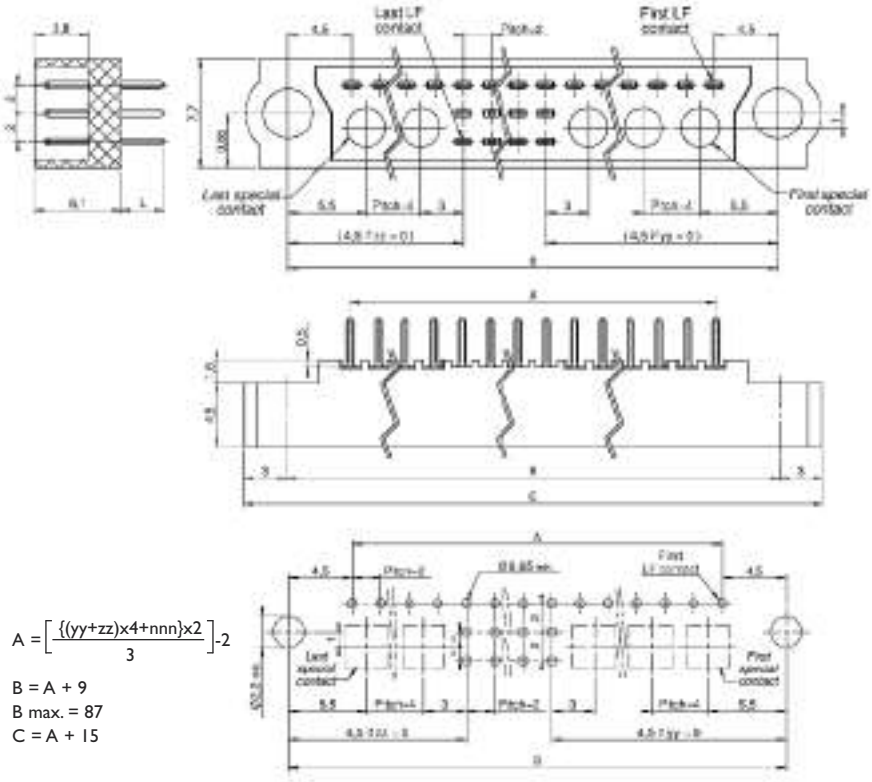

$$A = \left[\frac{\{(yy+zz)x4+nnn\}x2}{3}\right] - 2$$

B = A + 9
B max. = 87
C = A + 15

STRAIGHT PCB FOR HP/HF CONTACTS ONLY

Part numbering :

Number of HF or HP contacts

3 2 1 D 0 0 0 - 0 0 z z -

See Fixing on pages 69 to 74 "Fxx" without fixing — HF or HP P/N refer to page 75

Pattern for special contact :

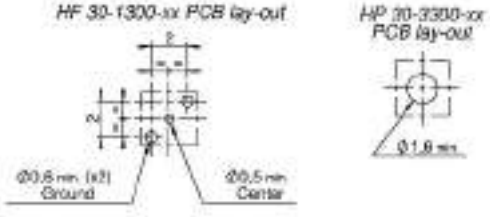

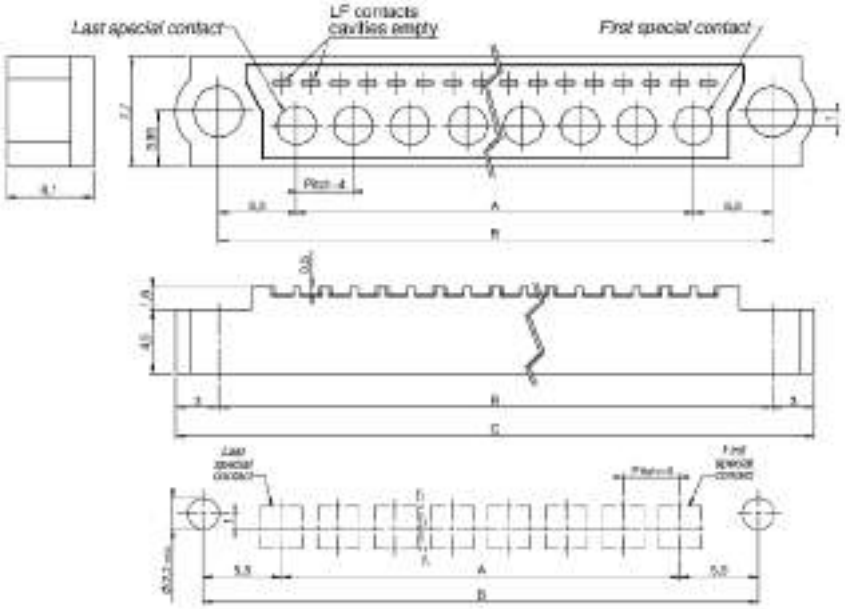

A = (zz x 4) - 4
B = A + 11
C = A + 17

Special contacts min. : 02
max. : 20

CMM 320
Male mixed-layout

90° PCB

Part numbering :

Number of contacts LF pin 1 side

Number of contacts opposite side LF pin 1

3 2 I n n n - y y z z -

Type :V-VL

See Fixing on pages 69 to 74 "Fxx" without fixing

HF or HP P/N refer to page 75

nnn = number of LF contacts

Type	L
V	3
VL	4,5

Pattern for special contact :

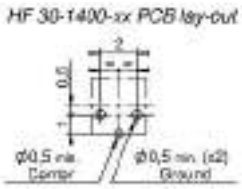

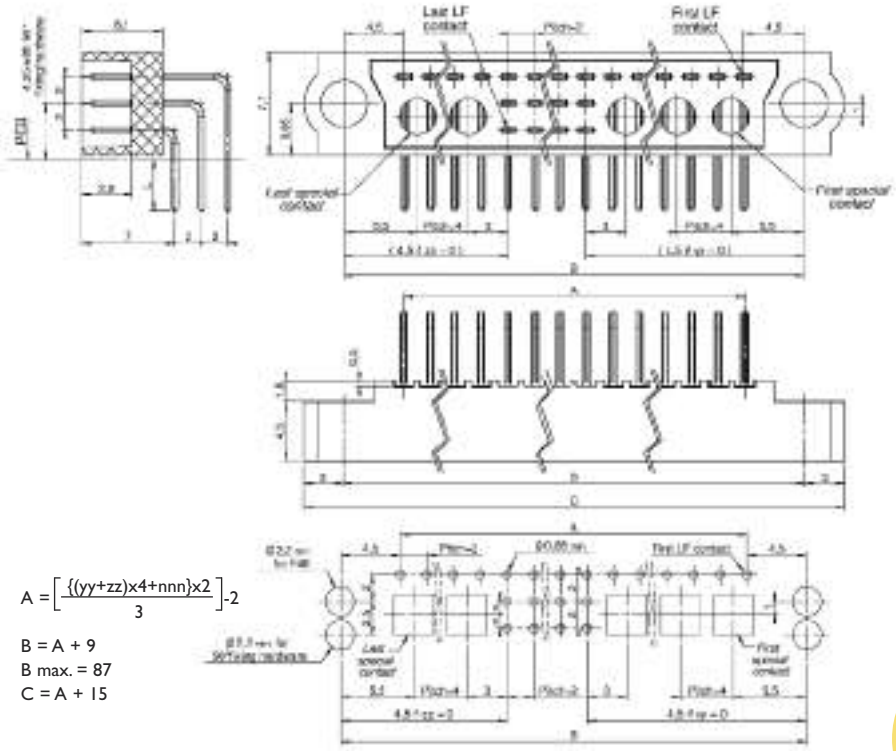

$$A = \left[\frac{\{(yy+zz)x4+nnn\}x2}{3}\right] - 2$$

B = A + 9

B max. = 87

C = A + 15

Special contacts mounted

90° PCB FOR HP/HF CONTACTS ONLY

Part numbering :

Number of HF or HP contacts

3 2 I D 0 0 0 - 0 0 z z -

See Fixing on pages 69 to 74 "Fxx" without fixing

HF or HP P/N refer to page 75

Pattern for special contact :

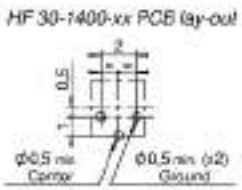

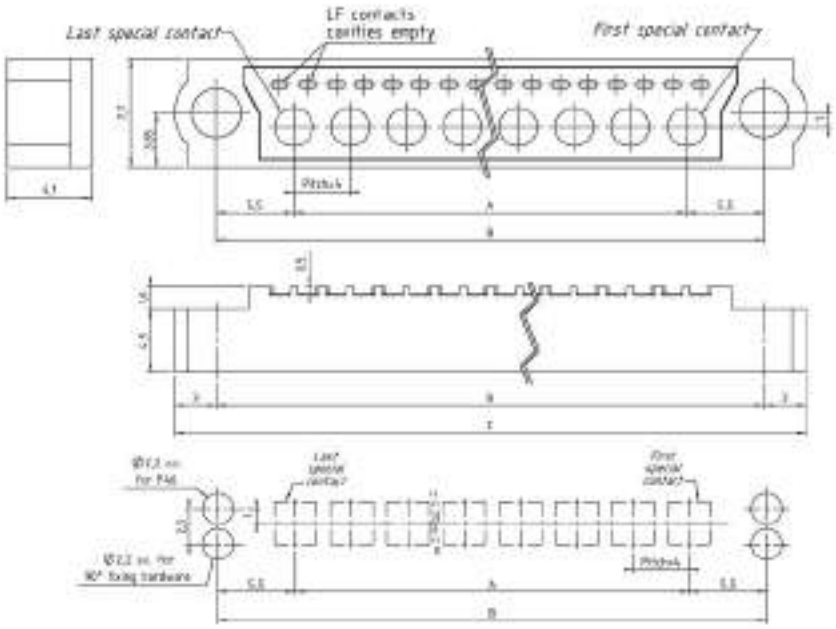

A = (zz x 4) - 4

B = A + 11

C = A + 17

Special contacts min. : 02
max. : 20

CMM 320
Male mixed-layout

CRIMP

Part numbering :

Number of contacts LF pin 1 side			Number of contacts opposite side LF pin 1												
3	2	1	n	n	n	-	y	y	z	z	-				
Type : S-C			See Fixing on pages 69 to 74 "Fxx" without fixing									HF or HP P/N refer to page 75			

nnn = number of LF contacts

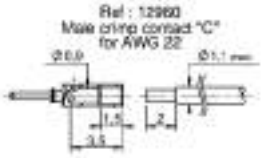

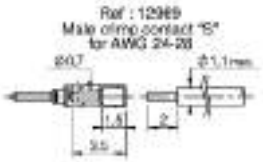

Type	Gauge
S	24-28
C	22

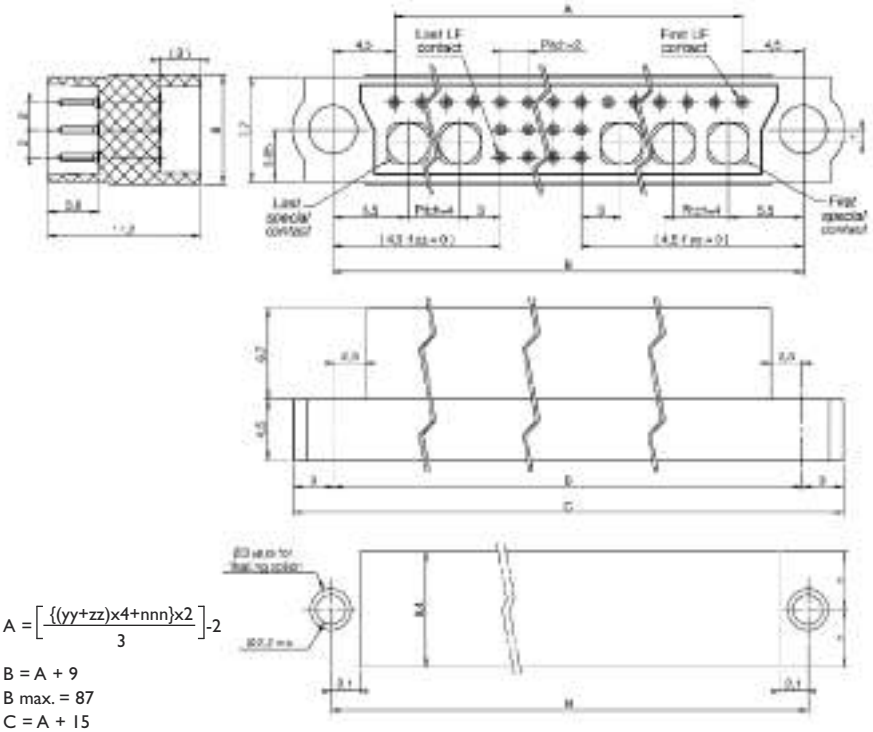

$$A = \left[\frac{\{(yy+zz)x4+nnn\}x2}{3}\right]-2$$

B = A + 9
B max. = 87
C = A + 15

CRIMP FOR HP/HF CONTACTS ONLY

Part numbering :

Number of HF or HP contacts															
3	2	1	E	0	0	0		-	0	0	z	z	-		
See Fixing on pages 69 to 74 "Fxx" without fixing													HF or HP P/N refer to page 75		

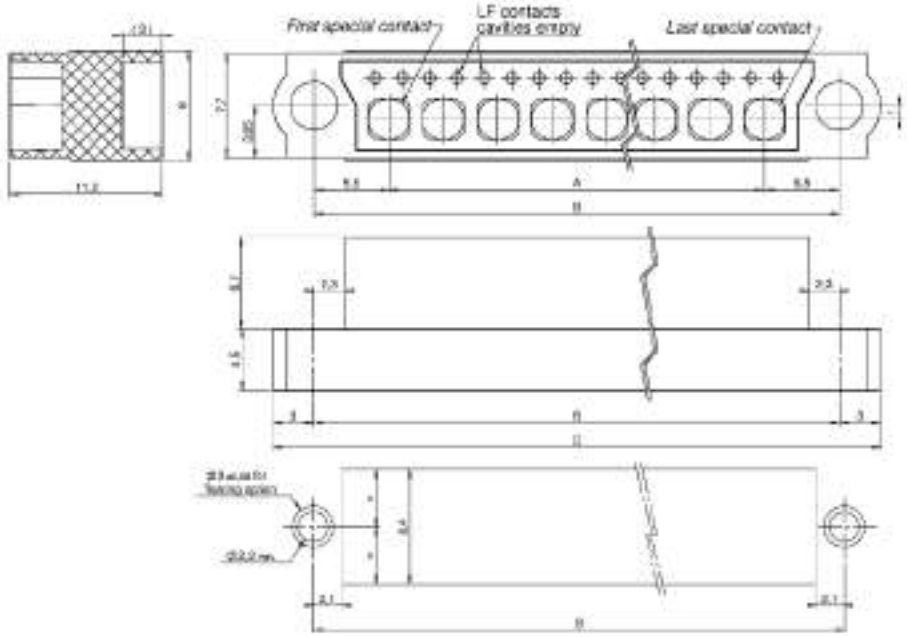

A = (zz x 4) - 4
B = A + 11
C = A + 17

Special contacts min. : 02
max. : 20

CMM 320
Female mixed-layout

STRAIGHT PCB

Part numbering :

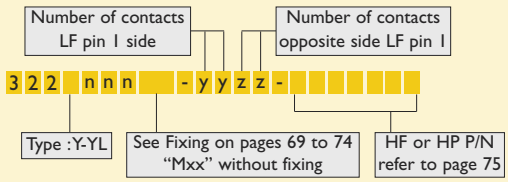

nnn = number of LF contacts

Type	L
Y	3
YL	4,5

Pattern for special contact :

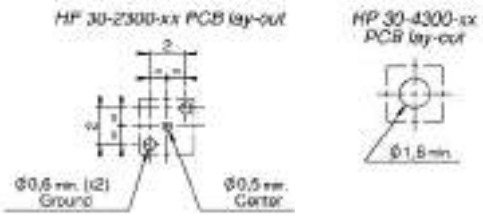

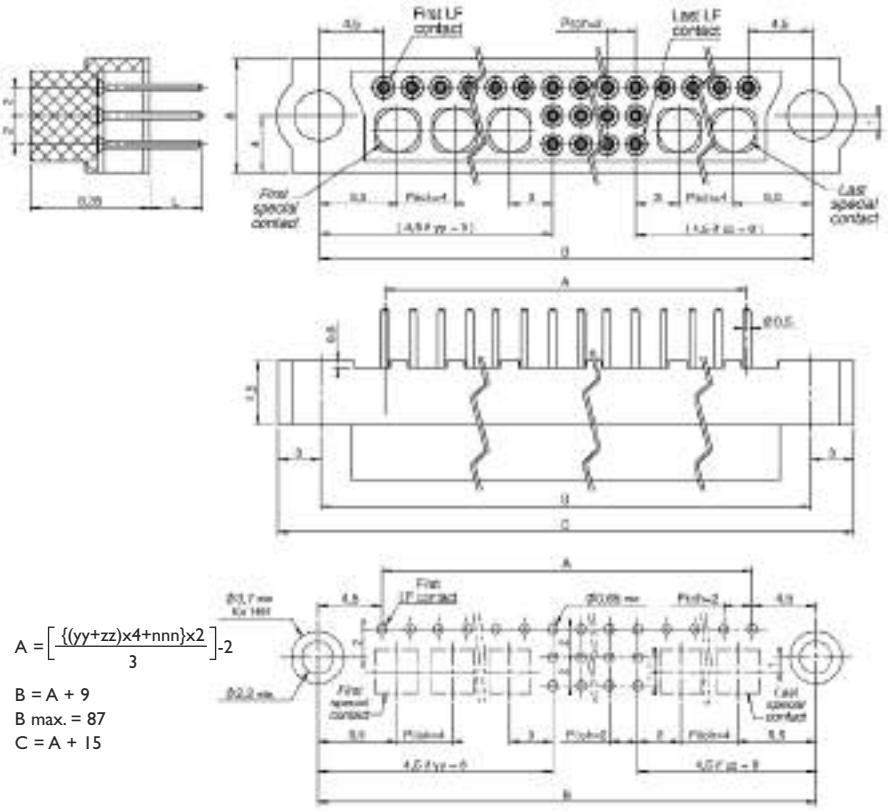

$$A = \left[\frac{\{(yy+zz)x4+nnn\}x2}{3}\right] - 2$$

B = A + 9
B max. = 87
C = A + 15

STRAIGHT PCB FOR HP/HF CONTACTS ONLY

Part numbering :

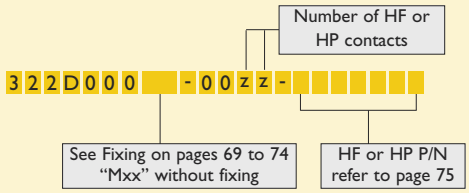

Pattern for special contact :

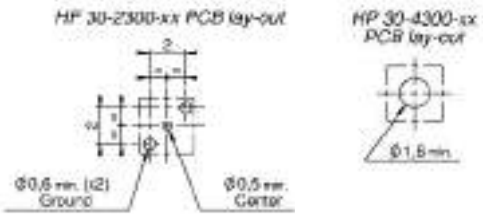

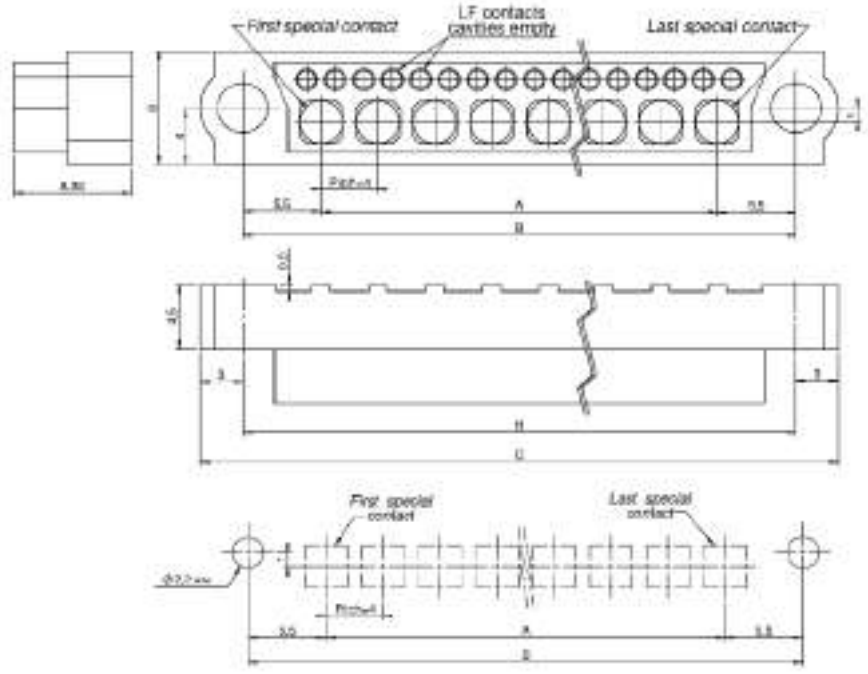

A = (zz x 4) - 4
B = A + 11
C = A + 17

Special contacts min. : 02
max. : 20

CMM 320
Female mixed-layout

90° PCB

Part numbering :

Number of contacts LF pin 1 side — Number of contacts opposite side LF pin 1

3 2 2 n n n - y y z z -

Type :V-VL — See Fixing on pages 69 to 74 "Mxx" without fixing — HF or HP P/N refer to page 75

nnn = number of LF contacts

Type	L
V	3
VL	4,5

Pattern for special contact :

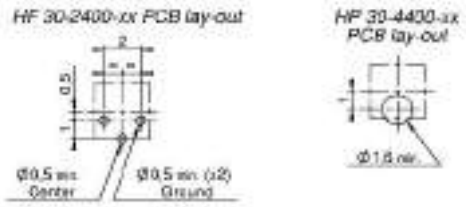

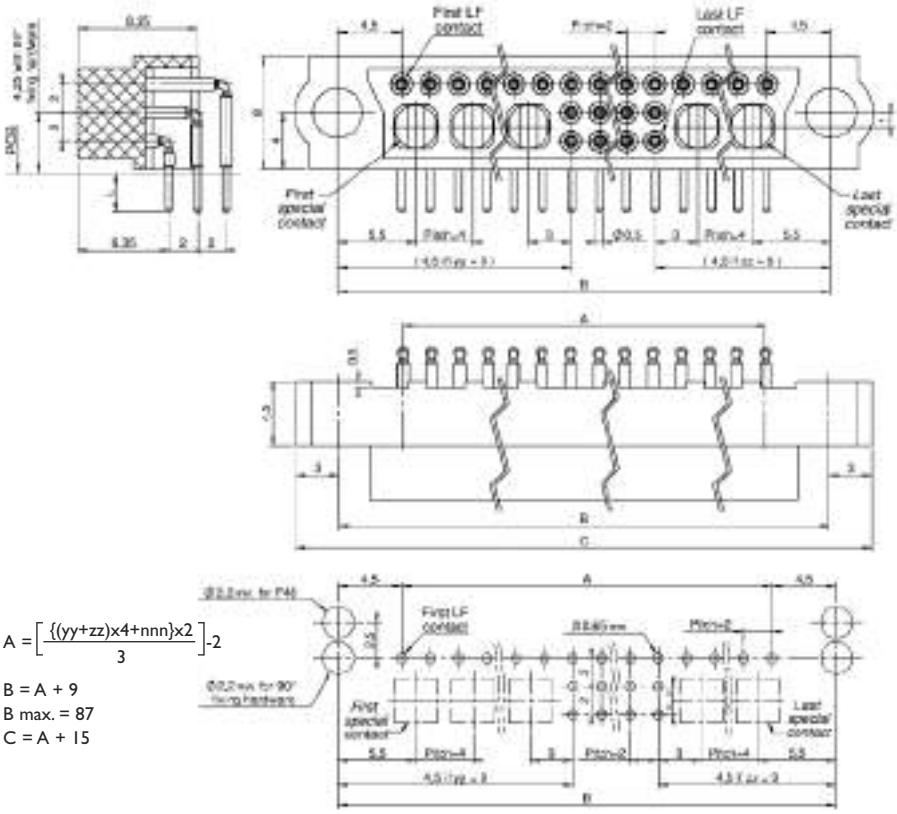

$$A = \left[\frac{\{(yy+zz)x4+nnn\}x2}{3}\right] - 2$$

B = A + 9
B max. = 87
C = A + 15

Special contacts mounted

90° PCB FOR HP/HF CONTACTS ONLY

Part numbering :

Number of HF or HP contacts

3 2 2 D 0 0 0 - 0 0 z z -

See Fixing on pages 69 to 74 "Mxx" without fixing — HF or HP P/N refer to page 75

Pattern for special contact :

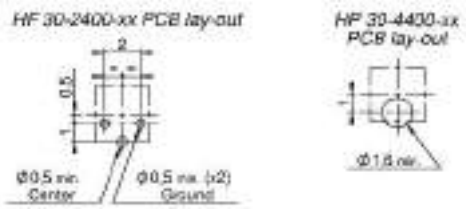

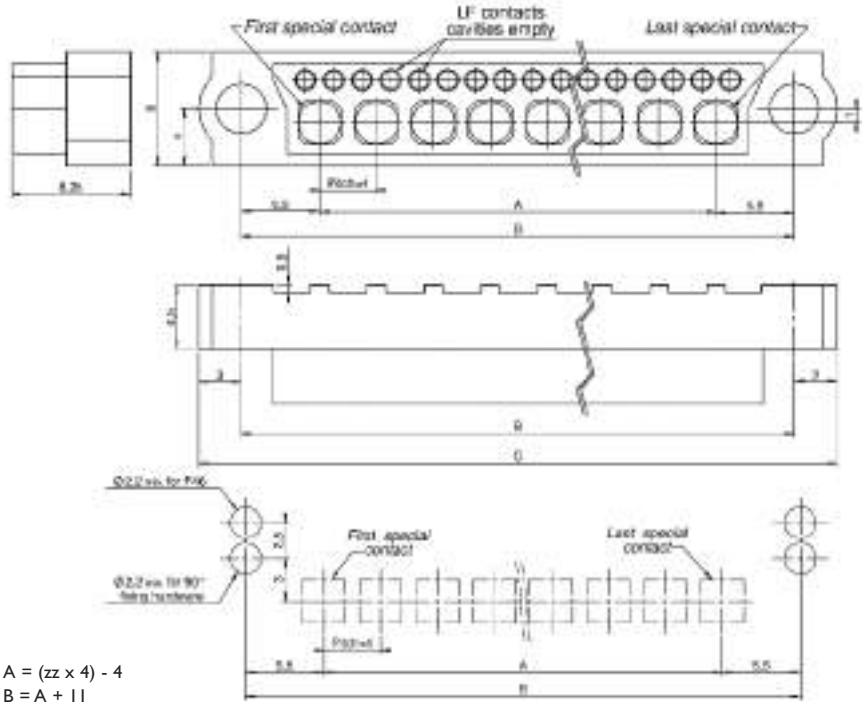

A = (zz x 4) - 4
B = A + 11
C = A + 17

Special contacts min. : 02
max. : 20

CMM 320
Female mixed-layout

CRIMP

Part numbering :

Number of contacts LF pin 1 side			Number of contacts opposite side LF pin 1											
3	2	2	n	n	n	-	y	y	z	z	-			

Type : S-C

See Fixing on pages 69 to 74 "Mxx" without fixing

HF or HP P/N refer to page 75

nnn = number of LF contacts

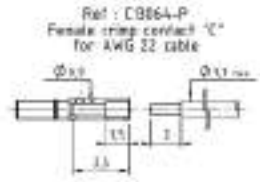

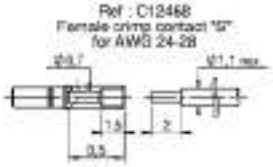

Type	Gauge
S	24-28
C	22

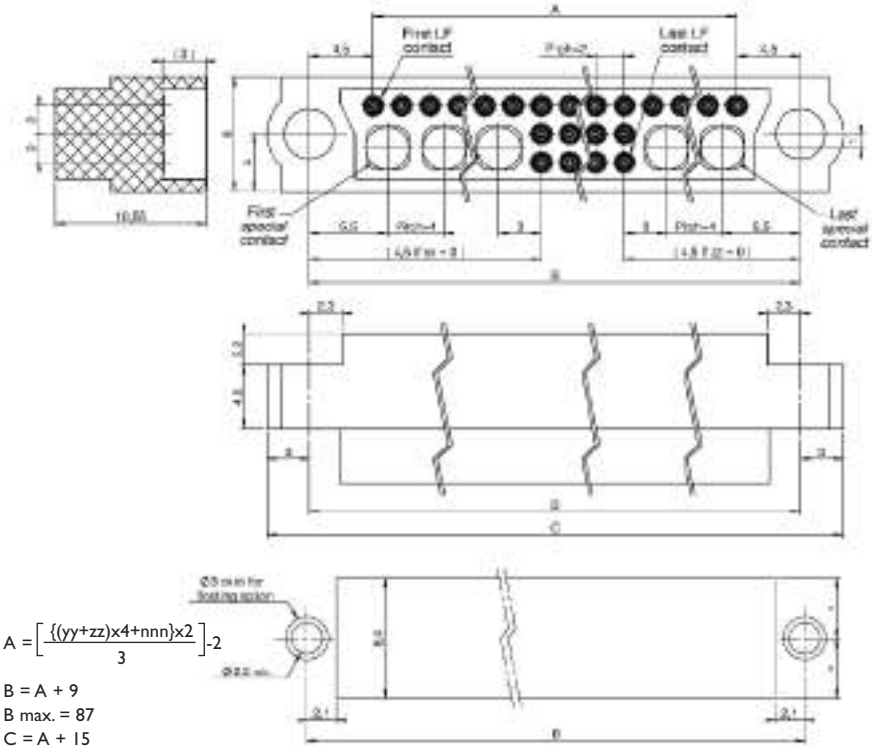

$$A = \left[\frac{\{(yy+zz)x4+nnn\}x2}{3}\right] - 2$$

B = A + 9
B max. = 87
C = A + 15

CRIMP FOR HP/HF CONTACTS ONLY

Part numbering :

Number of HF or HP contacts														
3	2	2	E	0	0	0		-	0	0	z	z	-	

See Fixing on pages 69 to 74 "Mxx" without fixing

HF or HP P/N refer to page 75

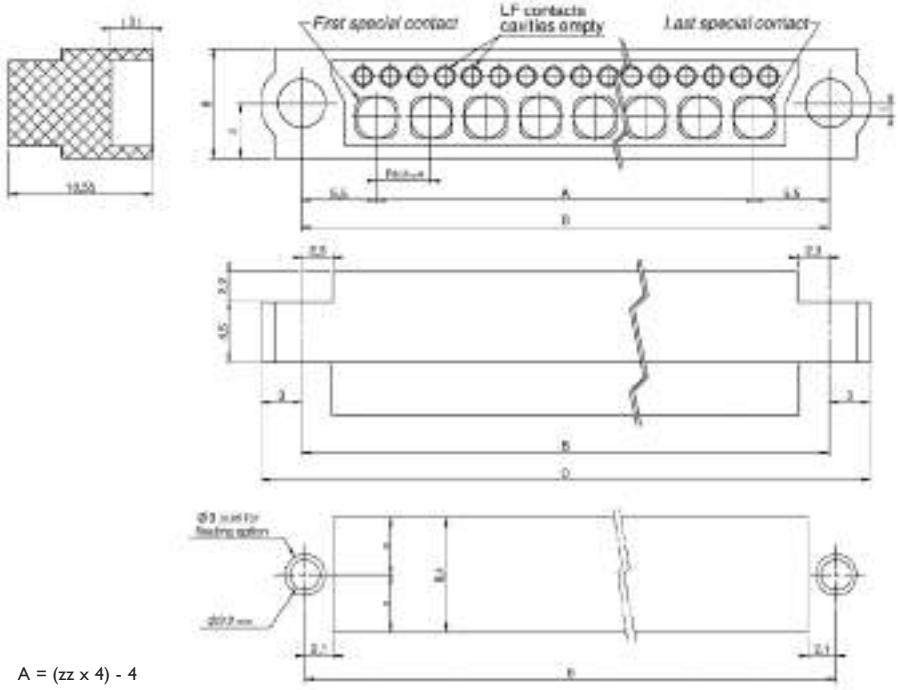

A = (zz x 4) - 4
B = A + 11
C = A + 17

Special contacts min. : 02
max. : 20

CMM 340

341Y012F42-1006-130012

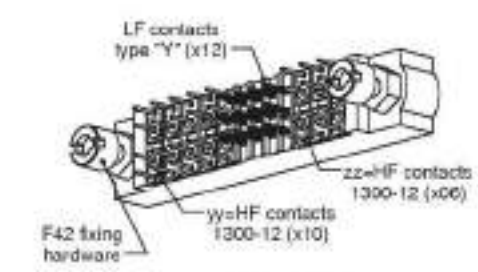

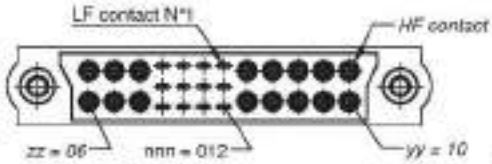

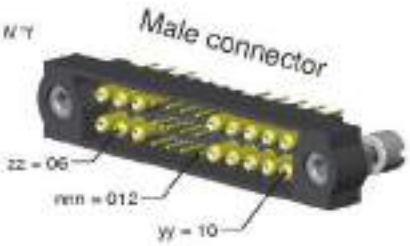

342V015F51-0808-440002

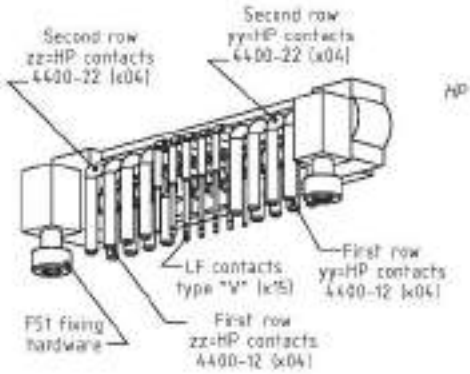

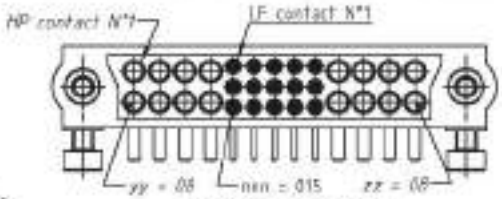

P/N for connector :
HP 4400-12 + HP 4400-22 = 4400-02

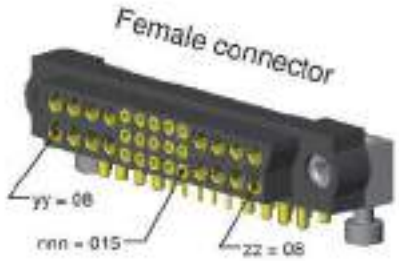

341D000F42-0024-130012

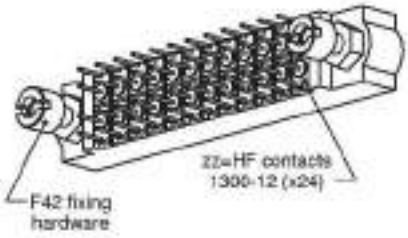

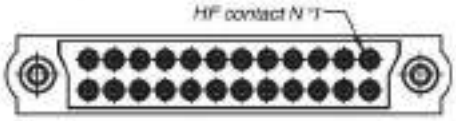

"D" stated in P/N for connectors on PCB
with only special contacts.

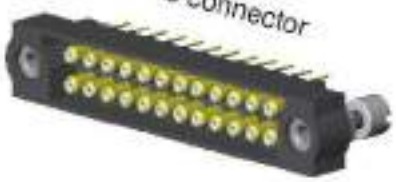

342E000F45-0016-4310

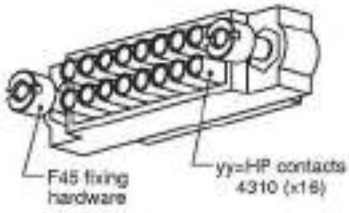

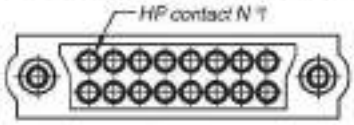

(HP contacts are supplied -not fitted- under P/N 22-4310)

"E" stated in P/N for connectors on cable
with only special contacs.

PART NUMBERING REMINDER

	Code with Low Frequency contacts only					Additional code for mixed-layout connector (HF/HP)		
	Series	Gender	Termination Style	Number of LF contacts	Fixing Hardware	Number of HF/HP contacts pin 1 side (LF contact number 1)	Number of HF/HP contacts opposite to LF contact number 1	HF/HP Contact Type
				n n n		– y y	z z –	
3 rows	34	1 male 2 female	Refer to table on page 7	Refer to the series 320	Refer to pages 69 to 74	Depends upon the number of LF contacts HF / HP : 64 contacts max. Type of HF/HP contact : please refer to pages 10-11		HP/HF 22 please refer to pages 95 to 102

CMM 340
Configuration

CONNECTOR SPACING

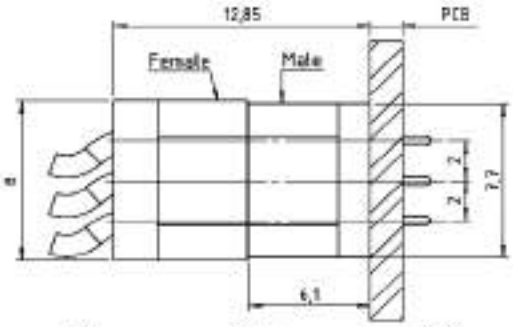

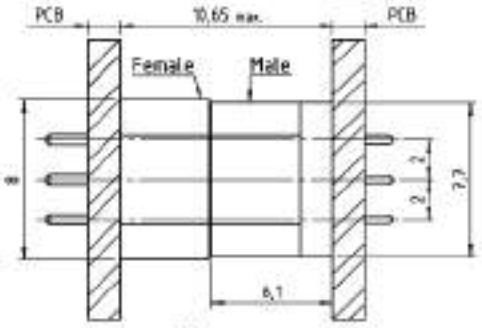

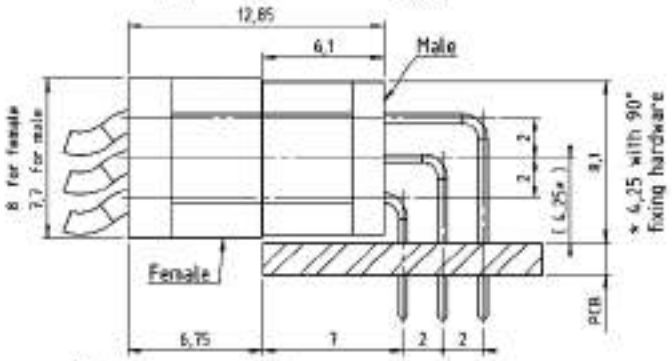

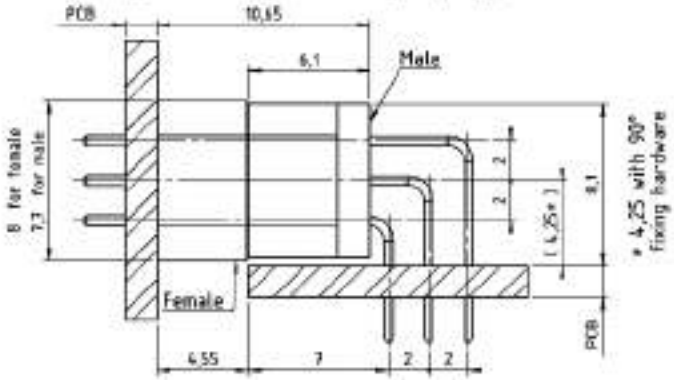

CONTACTS POSITIONS

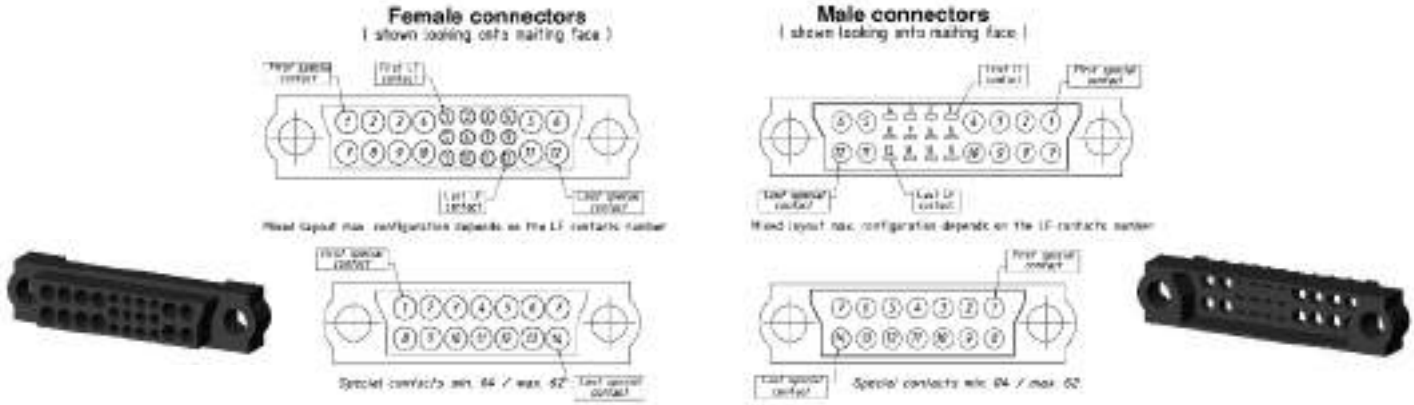

CMM 340
Male mixed-layout

STRAIGHT PCB

Part numbering :

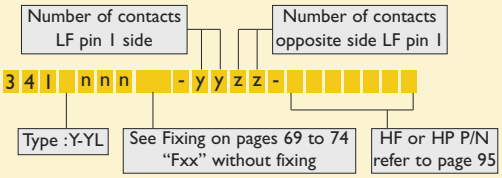

nnn = number of LF contacts

Type	L
Y	3
YL	4,5

Pattern for special contact :

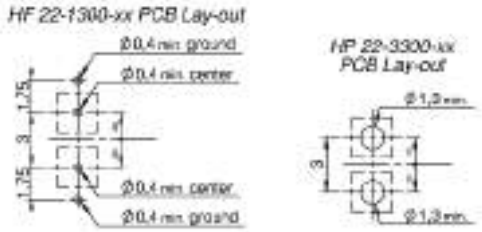

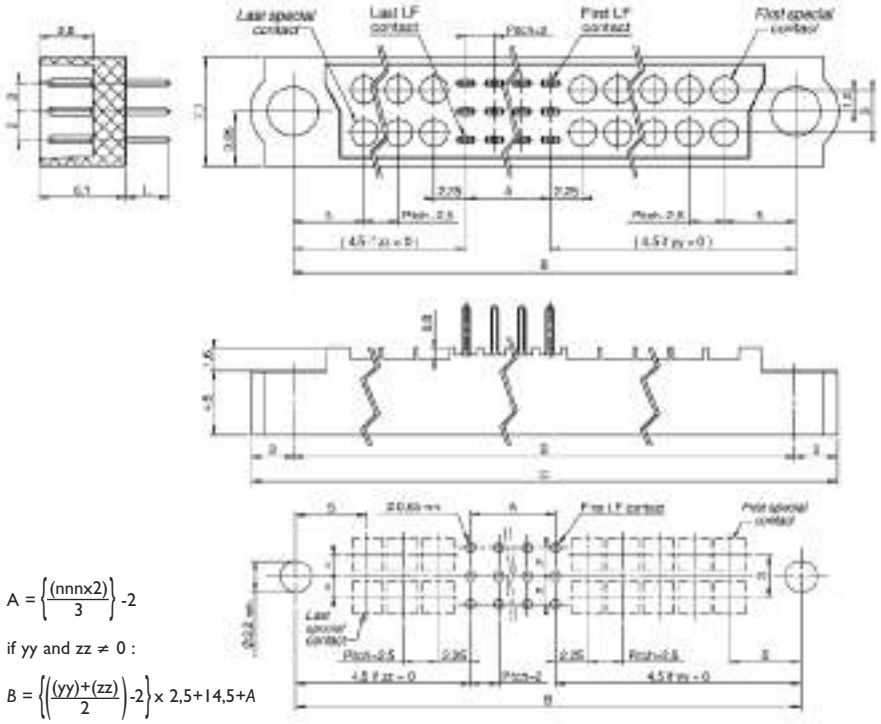

$$A = \left\{\frac{(nnnx2)}{3}\right\} - 2$$

if yy and zz ≠ 0 :

$$B = \left\{\left(\frac{(yy)+(zz)}{2}\right) - 2\right\} \times 2{,}5 + 14{,}5 + A$$

if yy or zz = 0 :

$$B = \left\{\left(\frac{(yy)_{or}(zz)}{2}\right) - 1\right\} \times 2{,}5 + 11{,}75 + A$$

B max. = 87
C = B + 6

STRAIGHT PCB FOR HP/HF CONTACTS ONLY

Part numbering :

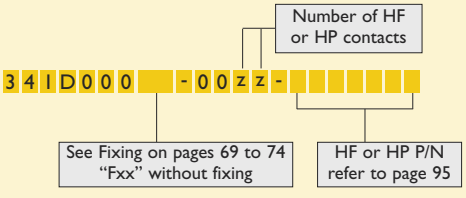

Pattern for special contact :

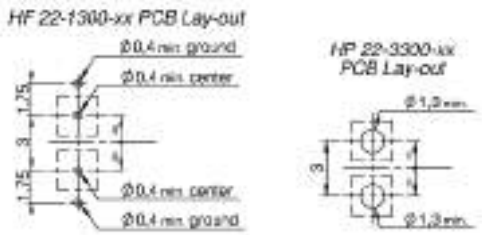

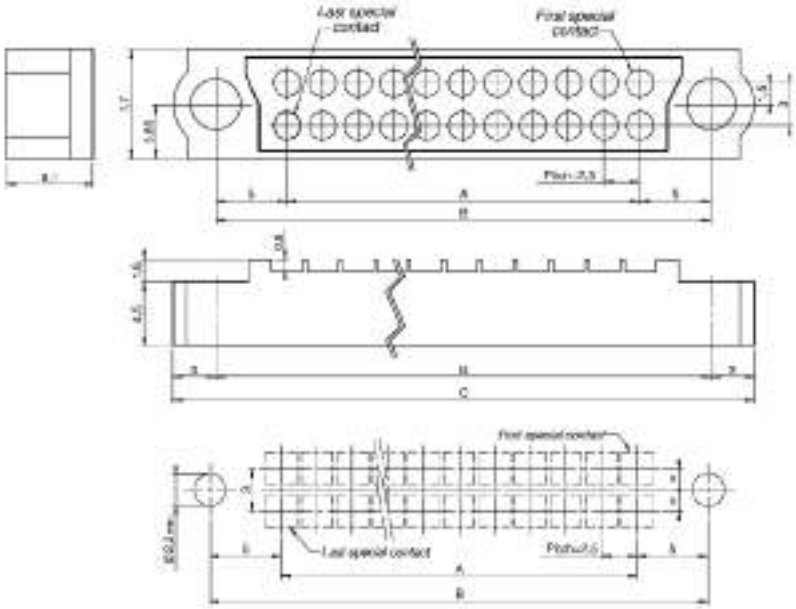

$$A = \left(\frac{(zzx2{,}5)}{2}\right) - 2{,}5$$

B = A + 10
C = B + 6

Refer to dimension table on cover page

Special contacts min. : 04
max. : 64

CMM 340
Male mixed-layout

90° PCB

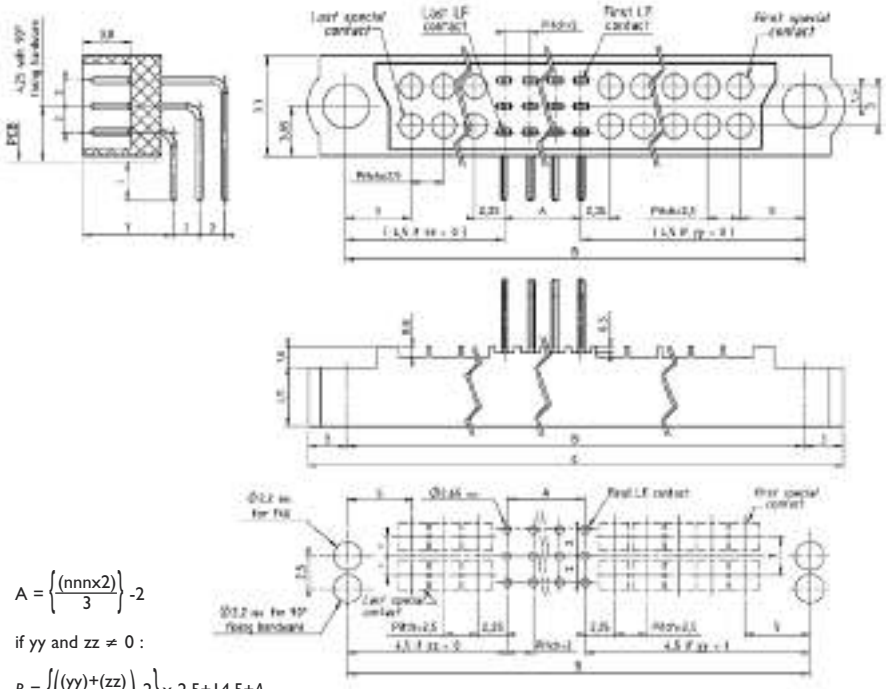

Part numbering :

Number of contacts LF pin 1 side			Number of contacts opposite side LF pin 1										
3	4	1	n	n	n	-	y	y	z	z	-		

Type : V-VL

See Fixing on pages 69 to 74 "Fxx" without fixing

HF or HP P/N refer to page 95

nnn = number of LF contacts

Type	L
V	3
VL	4,5

Pattern for special contact :

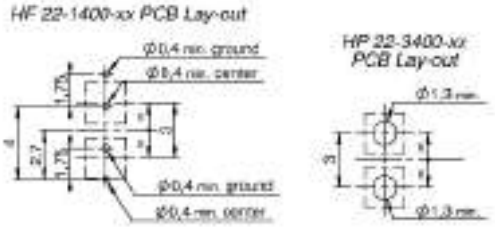

$$A = \left\{\frac{(nnnx2)}{3}\right\} -2$$

if yy and zz ≠ 0 :

$$B = \left\{\left(\frac{(yy)+(zz)}{2}\right)-2\right\} \times 2,5+14,5+A$$

if yy or zz = 0 :

$$B = \left\{\left(\frac{(yy)_{or}(zz)}{2}\right)-1\right\} \times 2,5+11,75+A$$

B max. = 87
C = B + 6

90° PCB FOR HP/HF CONTACTS ONLY

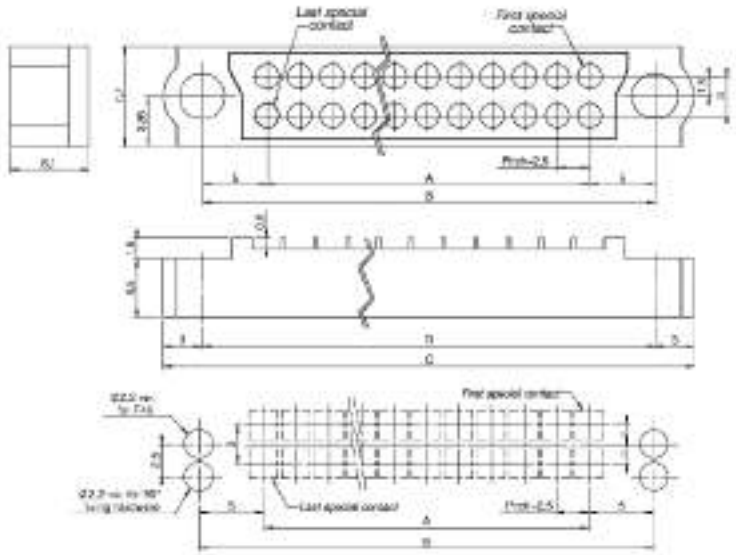

Part numbering :

Number of HF or HP contacts													
3	4	1	D	0	0	0		-	0	0	z	z	-

See Fixing on pages 69 to 74 "Fxx" without fixing

HF or HP P/N refer to page 95

Pattern for special contact :

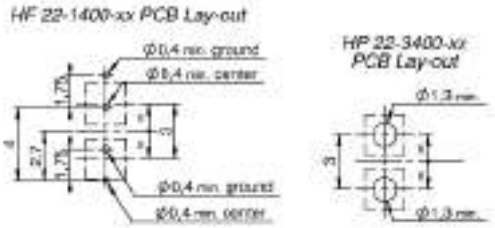

Special contacts min. : 04
max. : 64

$$A = \left(\frac{(zzx2,5)}{2}\right) -2,5$$

B = A + 10
C = B + 6

Refer to dimension table on cover page

CMM 340
Male mixed-layout

CRIMP

Part numbering :

Number of contacts LF pin 1 side			Number of contacts opposite side LF pin 1										
3	4	1	n	n	n			-	y	y	z	z	-

Type : S-C

See Fixing on pages 69 to 74 "Fxx" without fixing

HF or HP P/N refer to page 95

nnn = number of LF contacts

Type	Gauge
S	24-28
C	22

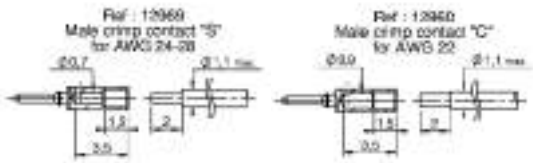

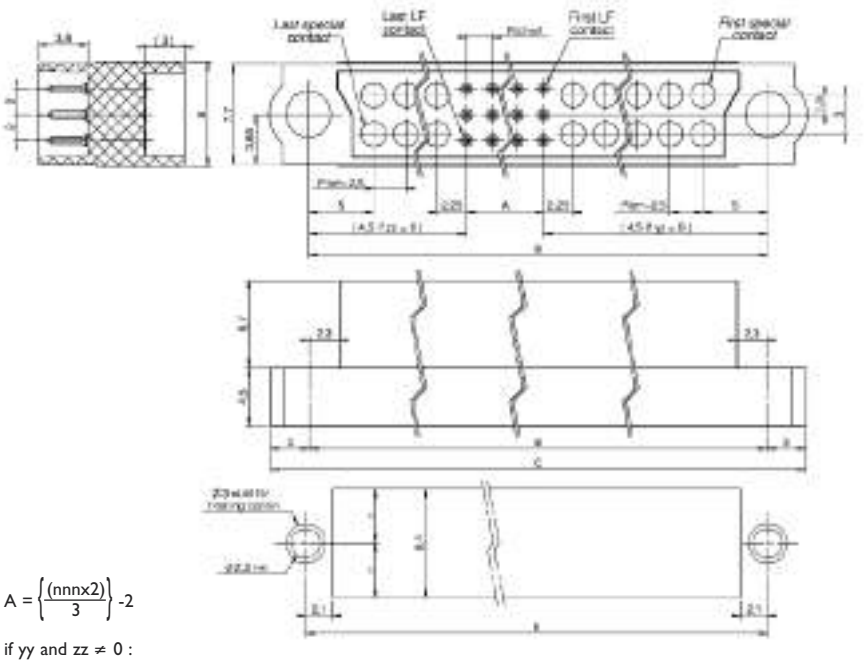

$$A = \left\{\frac{(nnnx2)}{3}\right\} -2$$

if yy and zz ≠ 0 :

$$B = \left\{\left(\frac{(yy)+(zz)}{2}\right)-2\right\} \times 2,5+14,5+A$$

if yy or zz = 0 :

$$B = \left\{\left(\frac{(yy)_{or}(zz)}{2}\right)-1\right\} \times 2,5+11,75+A$$

B max. = 87
C = B + 6

CRIMP FOR HP/HF CONTACTS ONLY

Part numbering :

												Number of HF or HP contacts	
3	4	1	E	0	0	0		-	0	0	z	z	-

See Fixing on pages 69 to 74 "Fxx" without fixing

HF or HP P/N refer to page 95

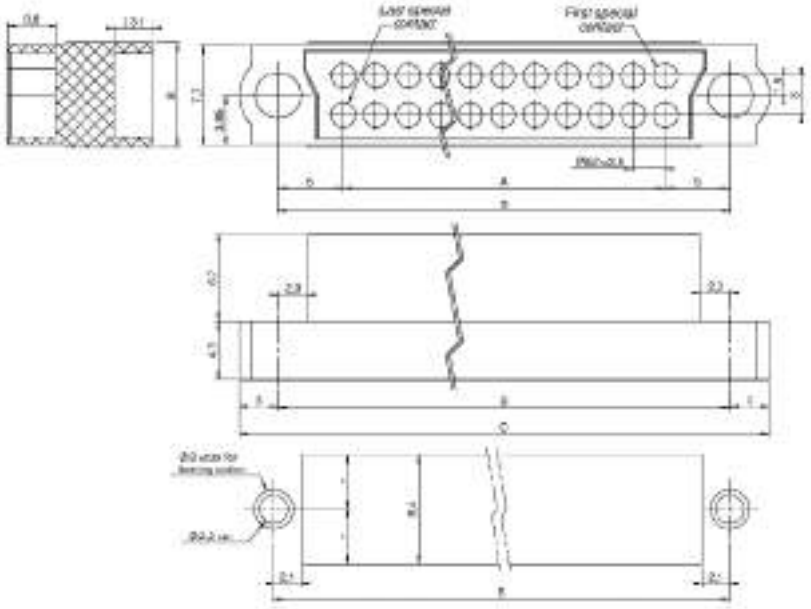

$$A = \left(\frac{(zzx2,5)}{2}\right)-2,5$$

B = A + 10
C = B + 6

Refer to dimension table on cover page

Special contacts min. : 04
max. : 64

CMM 340
Female mixed-layout

STRAIGHT PCB

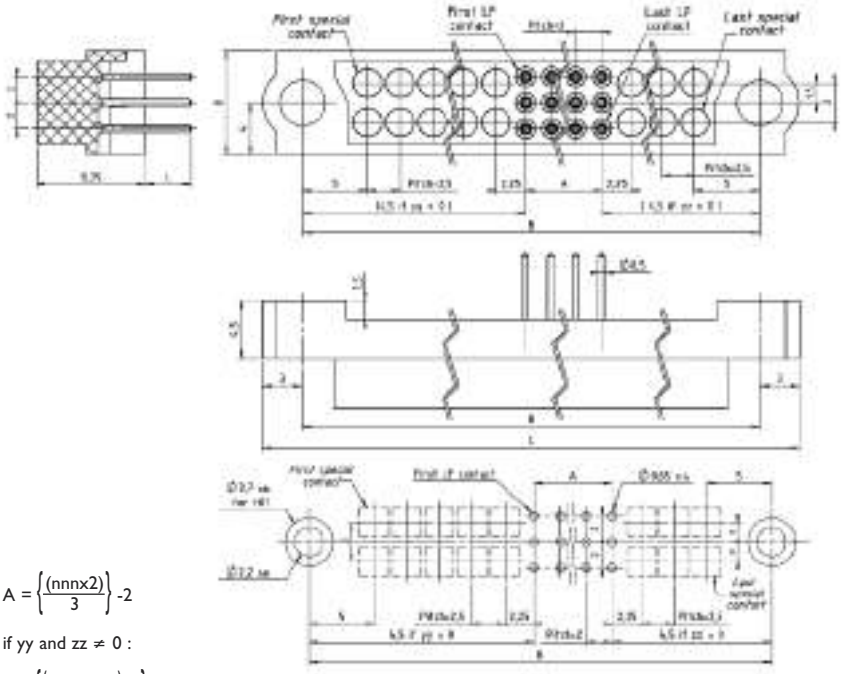

Part numbering :

Number of contacts LF pin 1 side			Number of contacts opposite side LF pin 1											
3	4	2	n	n	n	-	y	y	z	z	-			

Type : Y-YL

See Fixing on pages 69 to 74 "Mxx" without fixing

HF or HP P/N refer to page 95

nnn = number of LF contacts

Type	L
Y	3
YL	4,5

$$A = \left\{\frac{(nnnx2)}{3}\right\} - 2$$

if yy and zz ≠ 0 :

$$B = \left\{\left[\frac{(yy)+(zz)}{2}\right] - 2\right\} \times 2,5 + 14,5 + A$$

if yy or zz = 0 :

$$B = \left\{\left[\frac{(yy)_{or}(zz)}{2}\right] - 1\right\} \times 2,5 + 11,75 + A$$

B max. = 87

C = B + 6

Pattern for special contact :

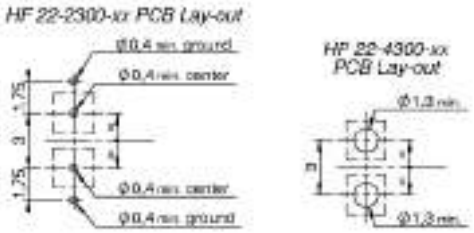

STRAIGHT PCB FOR HP/HF CONTACTS ONLY

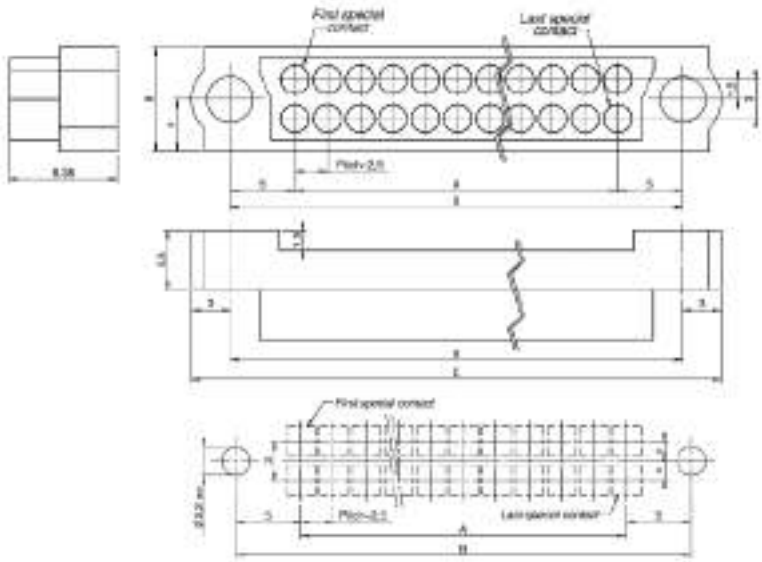

Part numbering :

Number of HF or HP contacts														
3	4	2	D	0	0	0		-	0	0	z	z	-	

See Fixing on pages 69 to 74 "Mxx" without fixing

HF or HP P/N refer to page 95

Special contacts min. : 04
max. : 64

$$A = \left(\frac{(zzx2,5)}{2}\right) - 2,5$$

B = A + 10

C = B + 6

Refer to dimension table on cover page

Pattern for special contact :

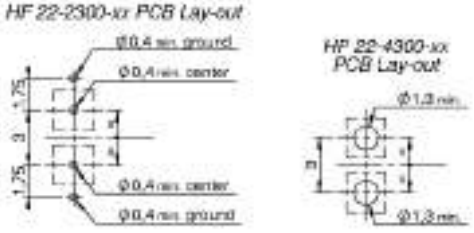

CMM 340
Female mixed-layout

90° PCB

Part numbering :

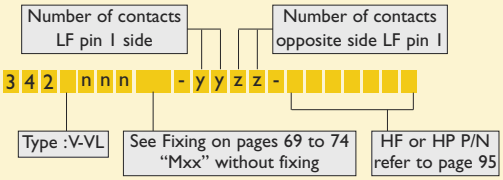

nnn = number of LF contacts

Type	L
V	3
VL	4,5

Pattern for special contact :

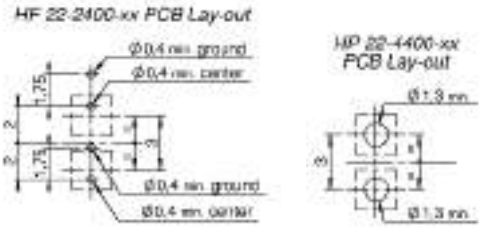

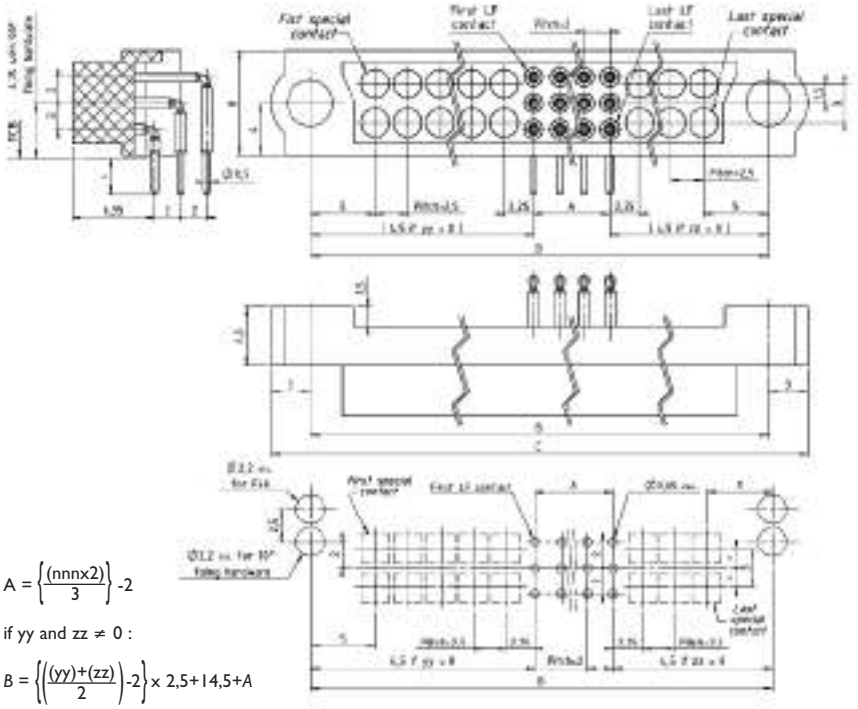

$$A = \left\{\frac{(nnnx2)}{3}\right\} - 2$$

if yy and zz ≠ 0 :

$$B = \left\{\left(\frac{(yy)+(zz)}{2}\right)-2\right\} \times 2,5+14,5+A$$

if yy or zz = 0 :

$$B = \left\{\left(\frac{(yy)_{or}(zz)}{2}\right)-1\right\} \times 2,5+11,75+A$$

B max. = 87
C = B + 6

90° PCB FOR HP/HF CONTACTS ONLY

Part numbering :

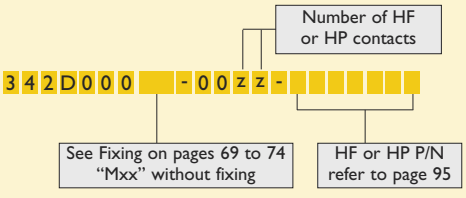

Pattern for special contact :

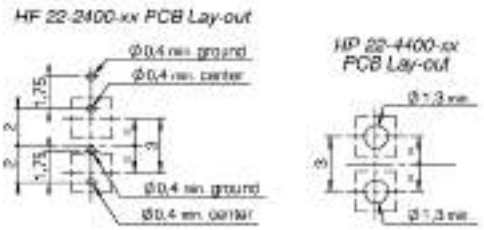

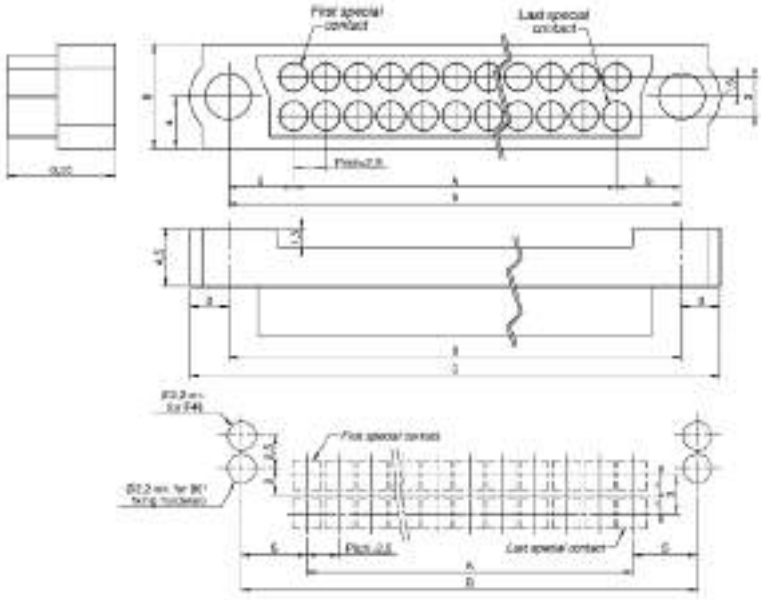

$$A = \left(\frac{(zzx2,5)}{2}\right) - 2,5$$

B = A + 10
C = B + 6

Refer to dimension table on cover page

Special contacts min. : 04
max. : 64

CMM 340
Female mixed-layout

CRIMP

Part numbering :

Number of contacts LF pin 1 side			Number of contacts opposite side LF pin 1										
3	4	2	n	n	n	-	y	y	z	z	-		

Type : S-C

See Fixing on pages 69 to 74 "Mxx" without fixing

HF or HP P/N refer to page 95

nnn = number of LF contacts

Type	Gauge
S	24-28
C	22

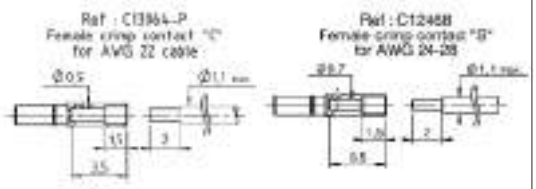

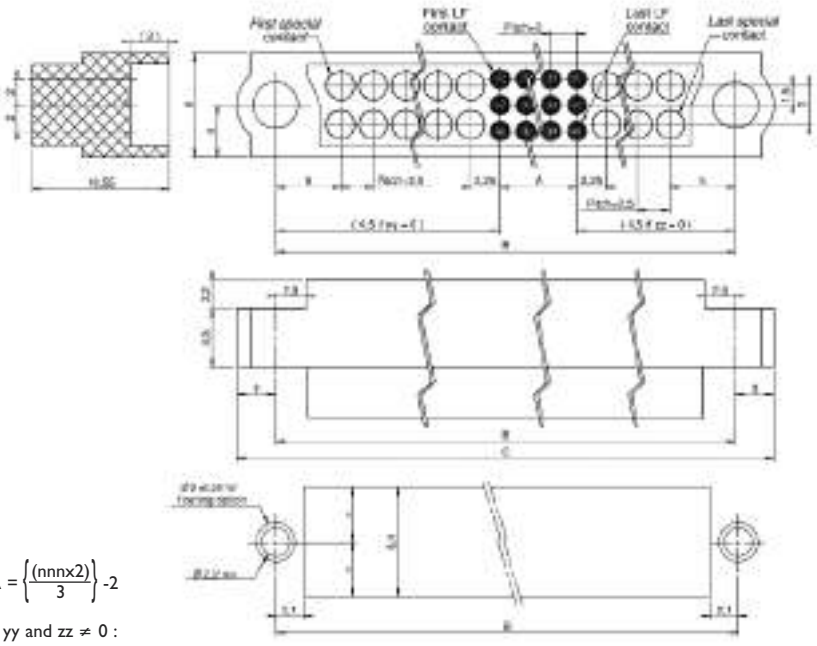

$A = \left\{\frac{(nnnx2)}{3}\right\} - 2$

if yy and zz ≠ 0 :

$B = \left\{\left[\frac{(yy)+(zz)}{2}\right] - 2\right\} \times 2{,}5 + 14{,}5 + A$

if yy or zz = 0 :

$B = \left\{\left[\frac{(yy)_{OR}(zz)}{2}\right] - 1\right\} \times 2{,}5 + 11{,}75 + A$

B max. = 87

C = B + 6

CRIMP FOR HP/HF CONTACTS ONLY

Part numbering :

Number of HF or HP contacts													
3	4	2	E	0	0	0		-	0	0	z	z	-

See Fixing on pages 69 to 74 "Mxx" without fixing

HF or HP P/N refer to page 95

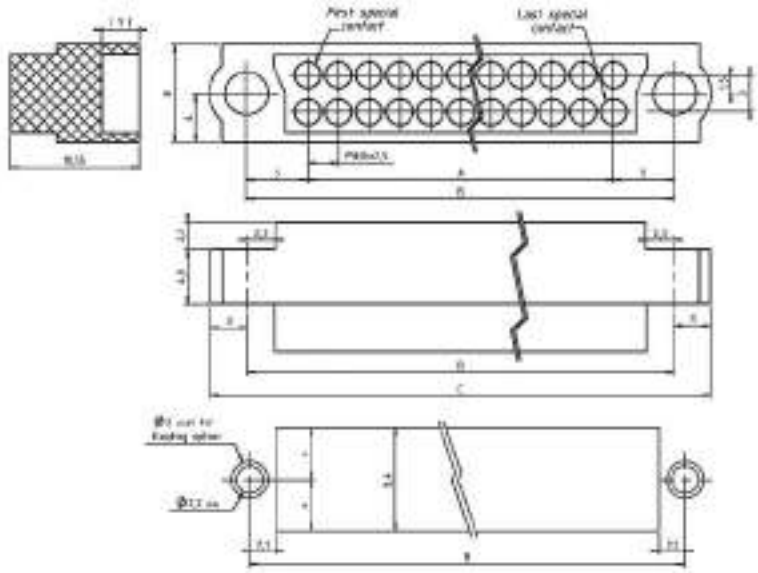

$A = \left(\frac{(zzx2{,}5)}{2}\right) - 2{,}5$

B = A + 10

C = B + 6

Refer to dimension table on cover page

Special contacts min. : 04
max. : 64

Fixing hardware for CMM SERIES 320/340

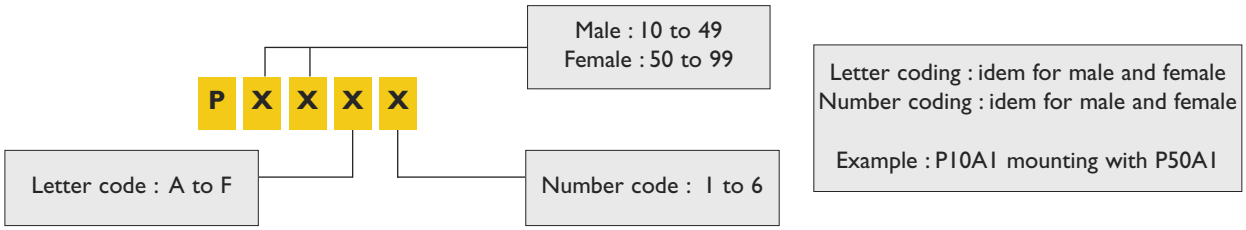

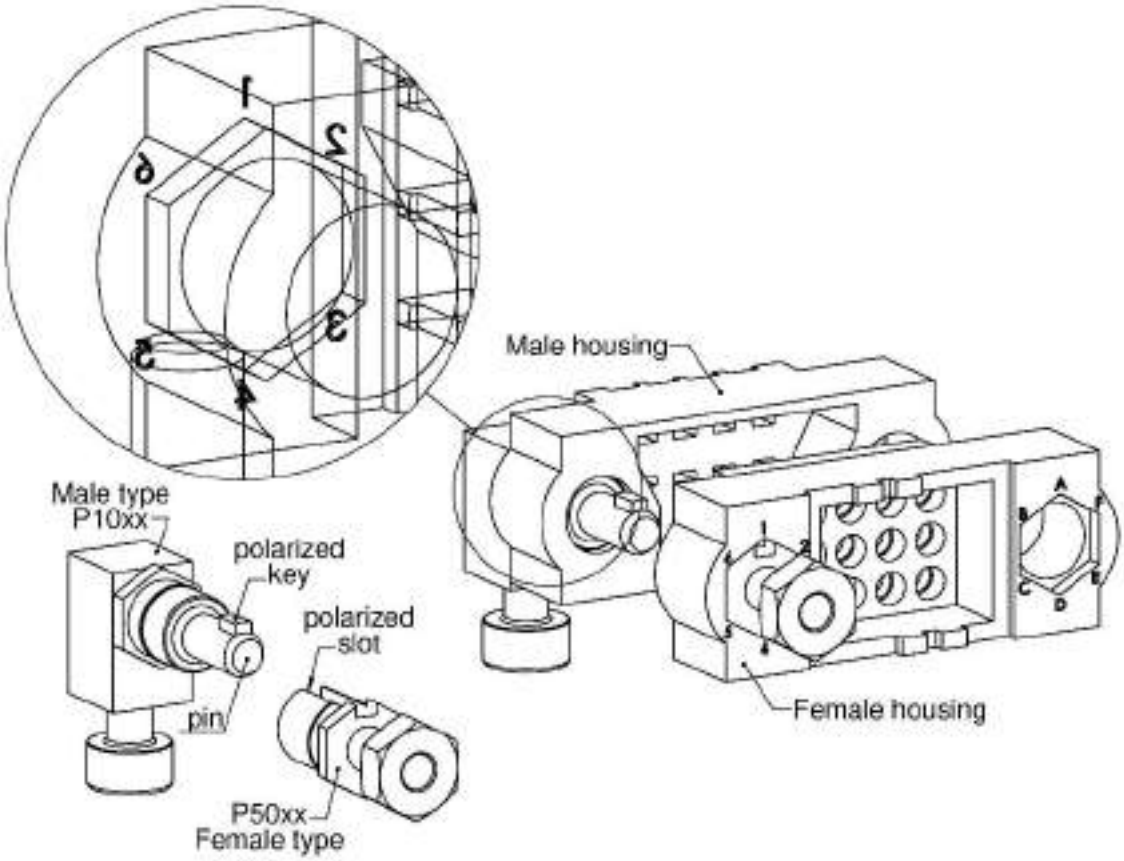

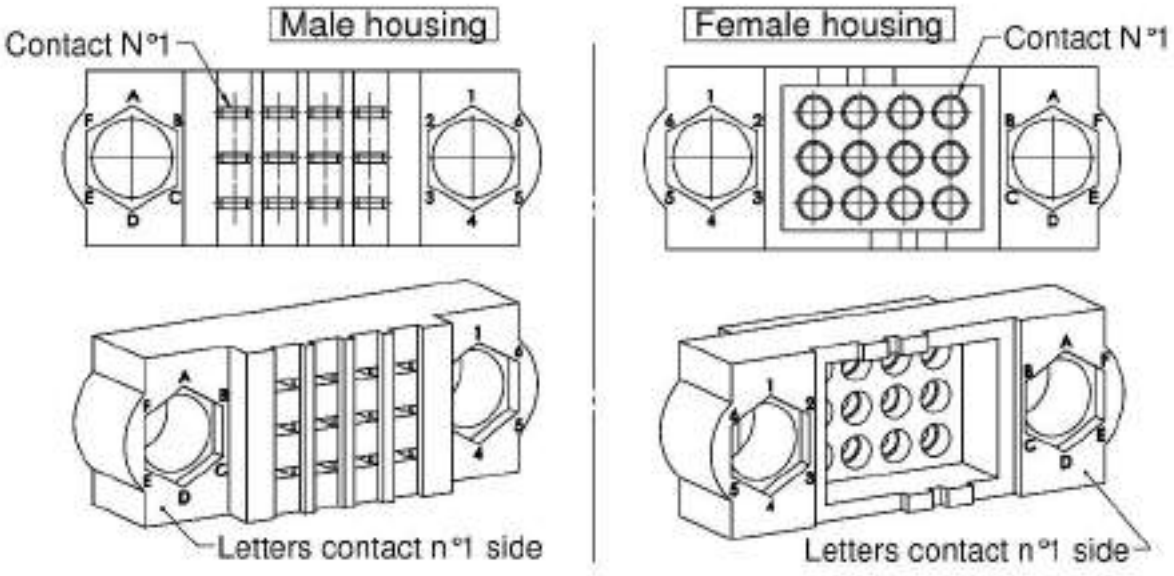

Fixing hardware for CMM 320/340

RACK INTERCONNECTION

MALE CONNECTORS CMM SERIES 320 & 340 RACK

FEMALE CONNECTORS SERIE 320 & 340 RACK	Type of contact in connector			PCB Contacts										Contacts on cable					
	Type of PCB mount			Straight								90°		Straight		90°		Floating	No fixing on PCB
		PCB thickness (mm)		0,8 min. 2 max.		1,5 min. 4 max.		0,8 min. 2 max.		1,5 min. 4 max.		4 max.		0,8 min. 2 max.	1,5 min. 4 max.	4 max.			
			Fixing	M38	M38H	M36	M36H	F58	F58H	F59	F59H	F48	H11	M35	M39	F48	H11	M3xx	F40
PCB Contacts	90° Straight	0,8 min. 2 max.	M35					OK	OK	OK	OK	OK				OK			OK
			M35H					OK	OK	OK	OK	OK				OK			OK
		1,5 min. 4 max.	M39					OK	OK	OK	OK	OK				OK			OK
			M39H					OK	OK	OK	OK	OK				OK			OK
	90°	4 max.	H11					OK	OK	OK	OK	A				A			OK
			F48	OK	OK	OK	OK						A	OK	OK		A	OK	
	No fixing on PCB		F40	OK	OK	OK	OK						OK	OK	OK		OK	OK	
Contacts on cable	Straight	0,8 min. 2 max.	M35					OK	OK	OK	OK	OK				OK			OK
		1,5 min. 4 max.	M39					OK	OK	OK	OK	OK				OK			OK
	90°	4 max.	H11					OK	OK	OK	OK	A				A			OK
			F48	OK	OK	OK	OK						A	OK	OK		A	OK	
	Floating		M3xx					OK	OK	OK	OK	OK				OK			OK
	No fixing on PCB		F40	OK	OK	OK	OK						OK	OK	OK		OK	OK	

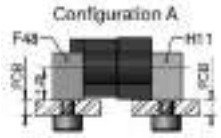

Recommended Torque : 0,2 N/m

A Card extension

REFERENCE	ASSEMBLY ON PCB	OVERALL DIMENSIONS	RECOMMENDATION
F40	**Straight on PCB** 	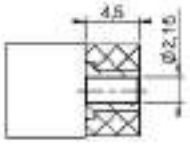	**F40 :** CMM female : **Y-YL-S-C-E** (D : straight) CMM male : **S-C-E**
F48	**90° on PCB 4 max.** 	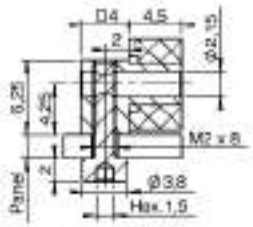	**F48 :** CMM female : **V-VL-S-C-E** (D : 90°) CMM male : **V-VL-R-S-C-E** (D : 90°)
F58 F58H	**Straight on PCB 0,8 min / 2 max** 	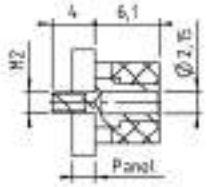	**F58 :** CMM male : **Y** (D : straight) **F58H :** CMM male : **Y** (D : straight)
F59 F59H	**Straight on PCB 1,5 min / 4 max** 	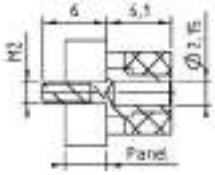	**F59 :** CMM male : **YL** (D : straight) **F59H :** CMM male : **YL** (D : straight)

Make it a habit! Use easy & automatic configurators for CMM micro-connectors single part and mating-half construction on **www.nicomatic.com**.

Fixing hardware for CMM 320/340

RACK INTERCONNECTION

Hexagonal nut	Standard nut
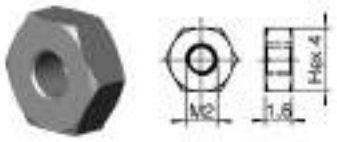	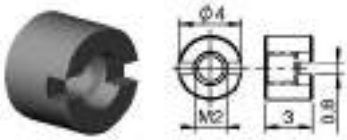

Reference	Assembly on PCB	Overall dimensions	Recommendation
M35 **M35H**	**Straight on PCB 0,8 min / 2 max** 	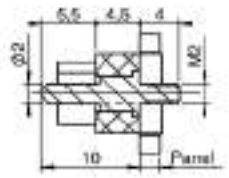	**M35 :** CMM female : **Y-S-C** (D-E : straight) CMM male : **S-C** (E : straight) **M35H :** CMM female : **Y** (D : straight)
M39 **M39H**	**Straight on PCB 1,5 min / 4 max** 	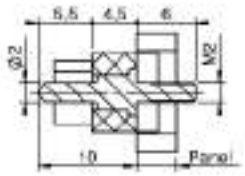	**M39 :** CMM female : **YL-S-C** (D-E : straight) CMM male : **S-C** (E : straight) **M39H :** CMM female : **YL** (D : straight)
M38 **M38H**	**Straight on PCB 0,8 min / 2 max** 	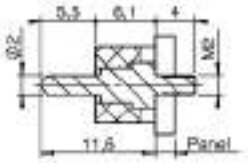	**M38 :** CMM male : **Y** (D : straight) **M38H :** CMM male : **Y** (D : straight)
M36 **M36H**	**Straight on PCB 1,5 min / 4 max** 	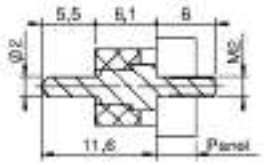	**M36 :** CMM male : **YL** (D : straight) **M36H :** CMM male : **YL** (D : straight)
M3xx **xx =** (PCB thickness + 0,2 mm) x 10 Example : for 3 mm PCB, the reference is **M332** (3 + 0,2) x 10 = 32 **xx =** 32	**Straight on PCB with floating option** 	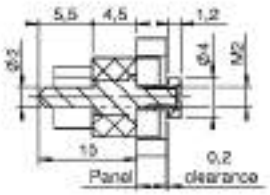	**M3xx :** CMM female : **S-C** (E : straight) CMM male : **S-C** (E : straight)
H11	**90° on PCB 4 max.** 	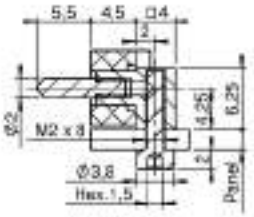	**H11 :** CMM female : **V-VL-S-C-E** (D : 90°) CMM male : **V-VL-R-S-C-E** (D : 90°)

Fixing hardware for CMM 320/340

LOCKED INTERCONNECTION

MALE CONNECTORS CMM SERIES 320 & 340 WITH LOCKING

FEMALE CONNECTORS CMM SERIES 320 & 340 WITH LOCKING

Type of contact in connector			PCB Contacts												Contacts on cable											
Type of PCB mount			Straight						90°						Straight		90°									
		PCB thickness (mm)	0,8 min. 2 max.		1,5 min. 4 max.		4 max.		1 min. 2 max.	2 min. 3 max.	3 min. 4 max.	Card edge with 30-1500-12 HF	No fixing on PCB		0,8 min. 2 max.	1,5 min. 4 max.	4 max.		1 min. 2 max.	2 min. 3 max.	3 min. 4 max.	Floating fixing	No fixing on PCB		No fixing on PCB With cover	With cover
		Fixing	F42	F42H	F44	F44H	F46	F51	H08	H08M	H08L	F50	H01	H01C	F52	F45	F46	F51	H08	H08M	H08L	F4xx	H01	H01C	F41	F57	M45
PCB Contacts	Straight	0,8 min. 2 max.	F52							OK	OK	OK		OK	OK					OK	OK	OK		OK	OK			OK
			F52H							OK	OK	OK		OK	OK					OK	OK	OK		OK	OK			OK
		1,5 min. 4 max.	F45							OK	OK	OK		OK	OK					OK	OK	OK		OK	OK			OK
			F45H							OK	OK	OK		OK	OK					OK	OK	OK		OK	OK			OK
	90°	4 max.	F46							A	A	A		OK	OK					A	A	A		OK	OK			B
			F51							A	A	A		OK	OK					A	A	A		OK	OK			B
		1 min. 2 max.	H08	OK	OK	OK	OK	A	A							OK	OK	A	A				OK			OK	B	
		2 min. 3 max.	H08M	OK	OK	OK	OK	A	A							OK	OK	A	A				OK			OK	B	
		3 min. 4 max.	H08L	OK	OK	OK	OK	A	A							OK	OK	A	A				OK			OK	B	
	No fixing on PCB		H01	OK	OK	OK	OK	OK	OK				OK			OK	OK	OK	OK				OK			OK	OK	
			H01C	OK	OK	OK	OK	OK	OK				OK			OK	OK	OK	OK				OK			OK	OK	
	No fixing on PCB		F41							OK	OK	OK		OK	OK					OK	OK	OK		OK	OK			OK
Contacts on cable	Straight	0,8 min. 2 max.	F52							OK	OK	OK		OK	OK					OK	OK	OK		OK	OK			OK
		1,5 min. 4 max.	F45							OK	OK	OK		OK	OK					OK	OK	OK		OK	OK			OK
	90°	4 max.	F46							A	A	A		OK	OK					A	A	A		OK	OK			B
			F51							A	A	A		OK	OK					A	A	A		OK	OK			B
		1 min. 2 max.	H08	OK	OK	OK	OK	A	A							OK	OK	A	A				OK			OK	B	
		2 min. 3 max.	H08M	OK	OK	OK	OK	A	A							OK	OK	A	A				OK			OK	B	
		3 min. 4 max.	H08L	OK	OK	OK	OK	A	A							OK	OK	A	A				OK			OK	B	
	Floating fixing		F4xx							OK	OK	OK		OK	OK					OK	OK	OK		OK	OK			OK
	No fixing on PCB		H01	OK	OK	OK	OK	OK	OK				OK	OK	OK	OK	OK	OK	OK			OK		OK	OK	OK		
			H01C	OK	OK	OK	OK	OK	OK				OK	OK	OK	OK	OK	OK	OK			OK		OK	OK	OK		
	No fixing on PCB		F41							OK	OK	OK								OK	OK	OK		OK				OK
	With cover		F57							B	B	B		OK	OK					B	B	B		OK				OK
	With cover		M45	OK	OK	OK	OK	B	B				OK			OK	OK	B	B				OK			OK	OK	

Make it a habit! Use easy & automatic configurators for CMM micro-connectors single part and mating-half construction on **www.nicomatic.com**.

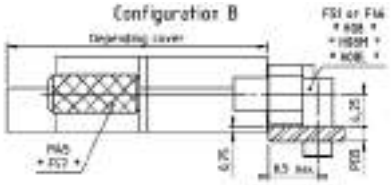

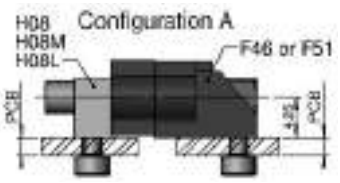

CMM 320/340 MALE AND FEMALE THREADED FIXING HARDWARE

REFERENCE	ASSEMBLY ON PCB	OVERALL DIMENSIONS	RECOMMENDATION
H01 H01C	Straight on PCB 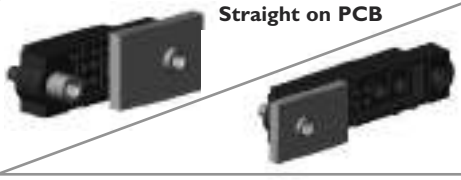	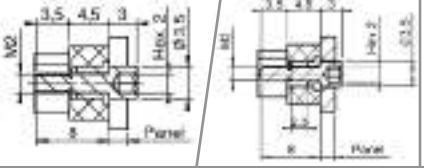	**H01/H01C :** CMM female : **Y-YL-S-C-E** (D : straight) CMM male : **Y-YL-S-C-E** (D : straight)
H08 PCB : 1 min. / 2 max. **H08M PCB :** 2 min. / 3 max. **H08L PCB :** 3 min. / 4 max.	90° on PCB 	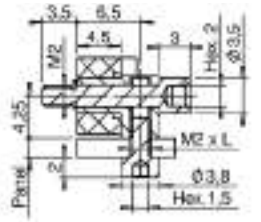	**H08/H08M/H08L :** CMM female : **V-VL-S-C-E** (D : 90°) CMM male : **V-VL-R-S-C-E** (D : 90°)

Fixing hardware for CMM 320/340

LOCKED INTERCONNECTION

Hexagonal nut	Standard nut
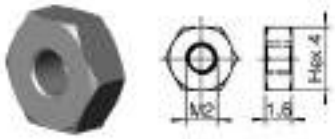	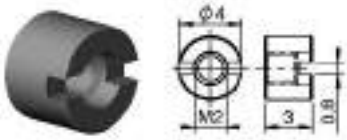

Recommended Torque : 0,2 N/m

Reference	Assembly on PCB	Overall dimensions	Recommendation
F4XX **xx** = (PCB thickness + 0,2 mm) x 10 Example : for 3 mm PCB, the reference is F432 (3 + 0,2) x 10 = 32 **xx** = 32	**Straight on PCB floating option** 	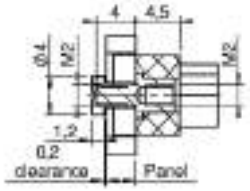	**F4XX :** CMM female : **S-C** (E : straight) CMM male : **S-C** (E : straight)
F41	**Straight on PCB** 	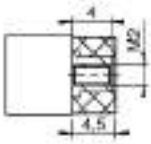	**F41 :** CMM female : **Y-YL-S-C-E** (D : straight) CMM male : **S-C-E**
F52 **F52H** 	**Straight on PCB 0,8 min / 2 max** 	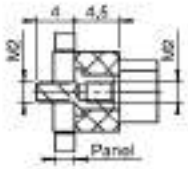	**F52 :** CMM female : **Y-S-C** (D-E : straight) CMM male : **S-C** (E : straight) **F52H :** CMM female : **Y** (D : straight)
F45 **F45H** 	**Straight on PCB 1,5 min / 4 max** 	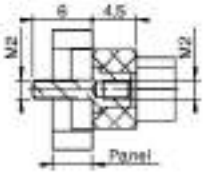	**F45 :** CMM female : **YL-S-C** (D-E : straight) CMM male : **S-C** (E : straight) **F45H :** CMM female : **YL** (D : straight)
F42 **F42H** 	**Straight on PCB 0,8 min / 2 max** 	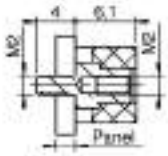	**F42 :** CMM male : **Y** (D : straight) **F42H :** CMM male : **Y** (D : straight)
F44 **F44H** 	**Straight on PCB 1,5 min / 4 max** 	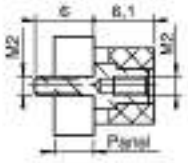	**F44 :** CMM male : **YL** (D : straight) **F44H :** CMM male : **YL** (D : straight)

Fixing for CMM 320/340

CMM 320/340 MALE AND FEMALE TAPPED FIXING HARDWARE

Reference	Assembly on PCB	Overall dimensions	Recommendation
F46	90° on PCB 4 max. 	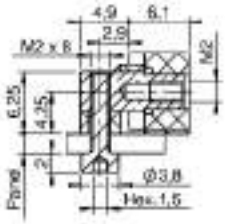	**F46 :** CMM female : **V-VL-S-C-E** (D : 90°) CMM male : **V-VL-R-S-C-E** (D : 90°)
F51	90° on PCB 4 max. 	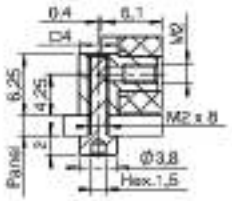	**F51 :** CMM female : **V-VL-S-C-E** (D : 90°) CMM male : **V-VL-R-S-C-E** (D : 90°)
F50	90° on PCB 4 max. 	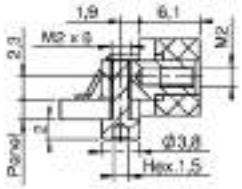	**F50 :** **Card edge** LF contact or mixed
F57	Cover option only 	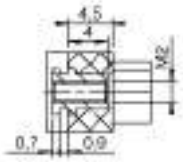	Male and female **S-C** (E : straight)
M45	Cover option only 	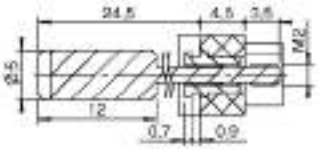	Male and female **S-C** (E : straight)

HF : High Frequency contacts series 30
HP : High Power contacts series 30

FOR CMM 220 AND 320

INSERTION

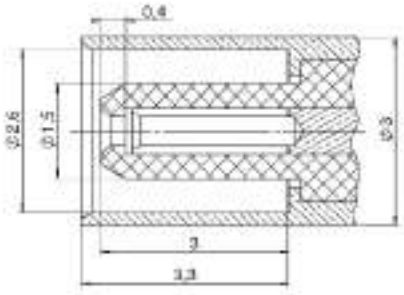

HF female contact insertion

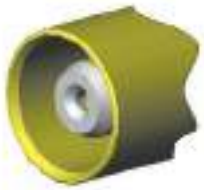

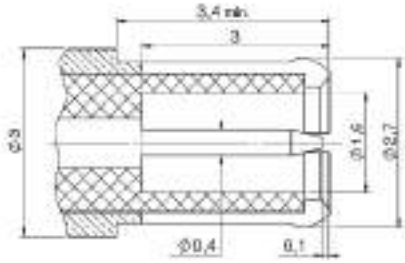

HF male contact insertion

PART NUMBERING FOR PCB HF & HP SPECIAL CONTACTS

These two digits are linked to the connector. Do not use them inside a CMM part number when loaded. All dash signs also disappear

Contact type :
3 = straight
4 = right angle
5 = SMT 90°
6 = SMT straight

Termination length
"CMM" = 3mm
"45" = 4.5mm
"12" = 3mm (Female CMM320)
"14" = 4.5mm (Female CMM320)
"…"

30 - _ _ 00 - _ _

Coaxmatic 30™
1 = male coax
2 = female coax
3 = high power male
4 = high power female

PART NUMBERING FOR HF & HP SPECIAL CONTACTS ON-CABLE

For HF contacts only Inner contact
Z = solder
S = crimp

For HF contacts only Shield
Z = solder
S = crimp

These two digits are linked to the connector. Do not use them inside a CMM part number when loaded. All dash signs also disappear

Contact type :
3 = straight
4 = right angle

Use these 2 digits only with 1.2mm dia. cables mounted on a HF straight contact
Crimp shield type: 01 = refer to page 81
02 = refer to page 81

30 - _ _ _ _ - _ _ - 75 - _ _

Special contacts :
1 = male HF
2 = female HF
3 = male HP
4 = female HP

Double shield DS

Use these 2 digits only with 75 Ohm cables

Contact termination:
10 = for HP 10A
15 = for HP 15A
20 = for HP 20A
12 = for HF cable 1.2mm
20 = for HF cable 2mm
24 = for HF cable 2.4mm
26 = for HF cable 2.6mm
47 = for HF cable type UT47
85 = for HF cable type UT85
"…"

HF : High Frequency contact series 30

MALE STRAIGHT ON PCB P/N 30-1300-xx

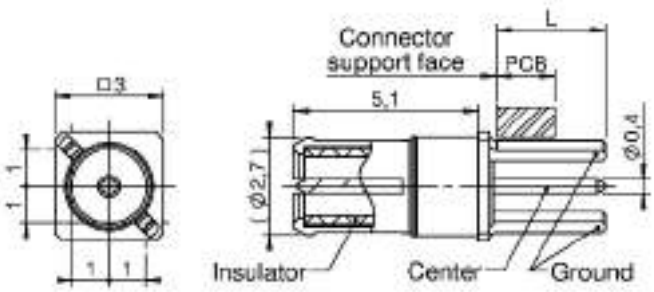

Loaded	Length L
1300CMM	3 mm
130045	4,5 mm

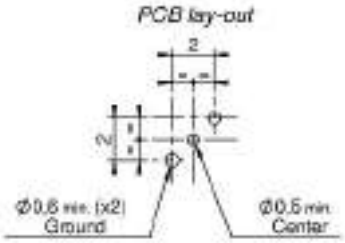

FEMALE STRAIGHT ON PCB P/N 30-2300-xx

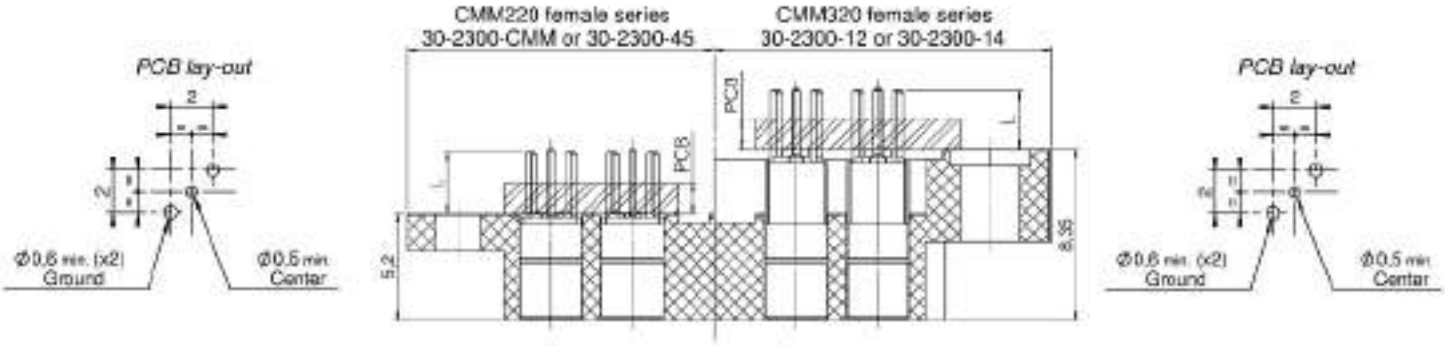

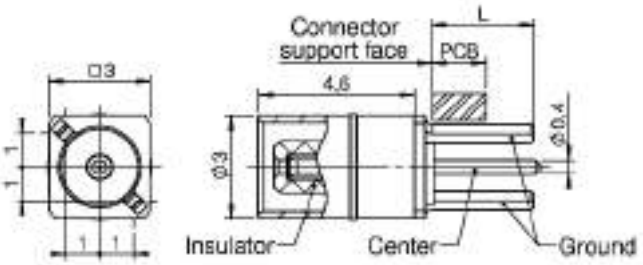

Loaded	Length L
2300CMM	3 mm
230045	4,5 mm

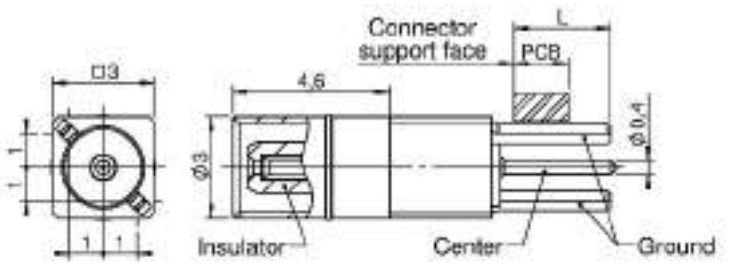

Loaded	Length L
230012	3 mm
230014	4,5 mm

PCB LAYOUT 30-1300-xx & 30-2300-xx

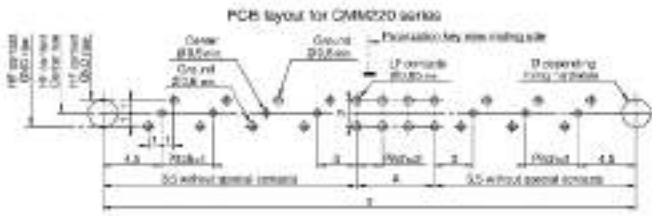

A = nn - 2
B = {(yy + zz) x 4} + A + 7
B max. = 65 mm

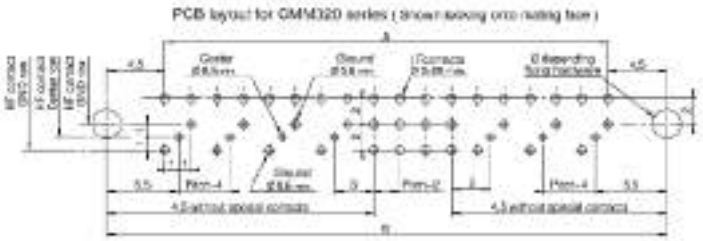

$$A = \left[\frac{\{(yy + zz) \times 4 + nn\} \times 2}{3}\right] - 2$$

B = A + 9
B max. = 87

HF : High Frequency contact series 30

MALE 90° PCB P/N 30-1400-xx

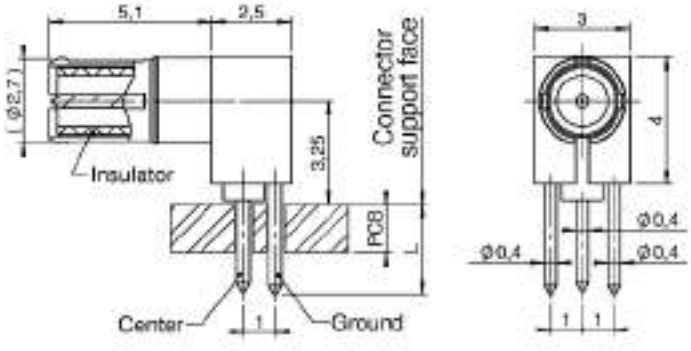

Loaded	Length L
1400CMM	3 mm
140045	4,5 mm

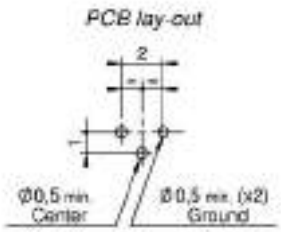

PCB LAYOUT 30-1400-xx

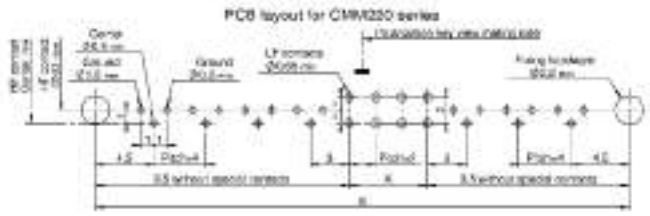

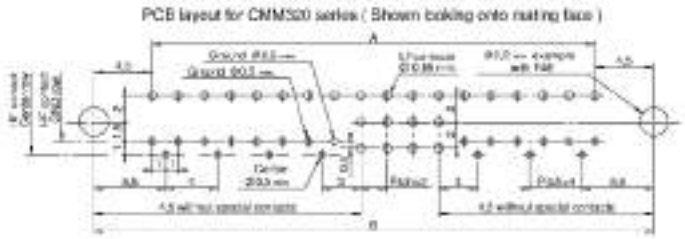

FEMALE 90° PCB P/N 30-2400-xx

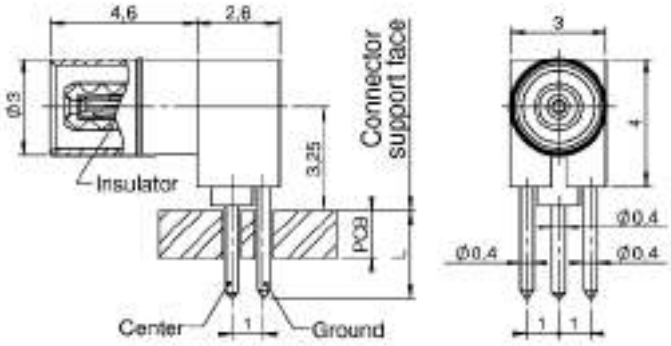

Loaded	Length L
2400CMM	3 mm
240045	4,5 mm

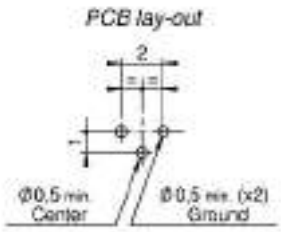

PCB LAYOUT 30-2400-xx

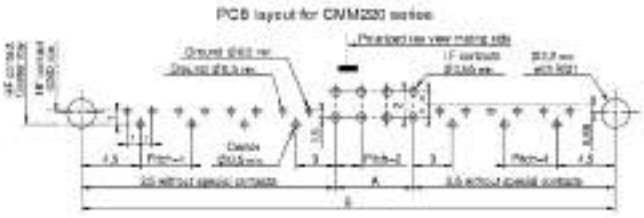

A = nn - 2
B = {(yy + zz) x 4} + A + 7
B max. = 65 mm

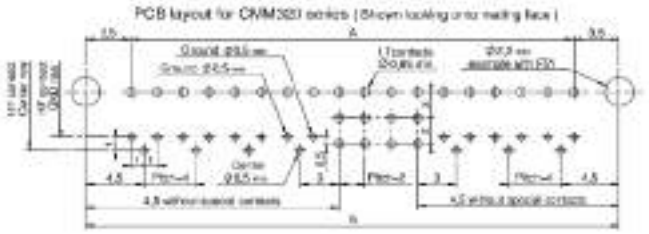

$$A = \left[\frac{\{(yy + zz) \times 4 + nn\} \times 2}{3} \right] - 2$$

B = A + 9
B max. = 87

HF : High Frequency contact series 30

MALE 90° SMT FOR CMM 220 SERIES (WITHOUT CONTACTS) P/N 30-1500-CMM

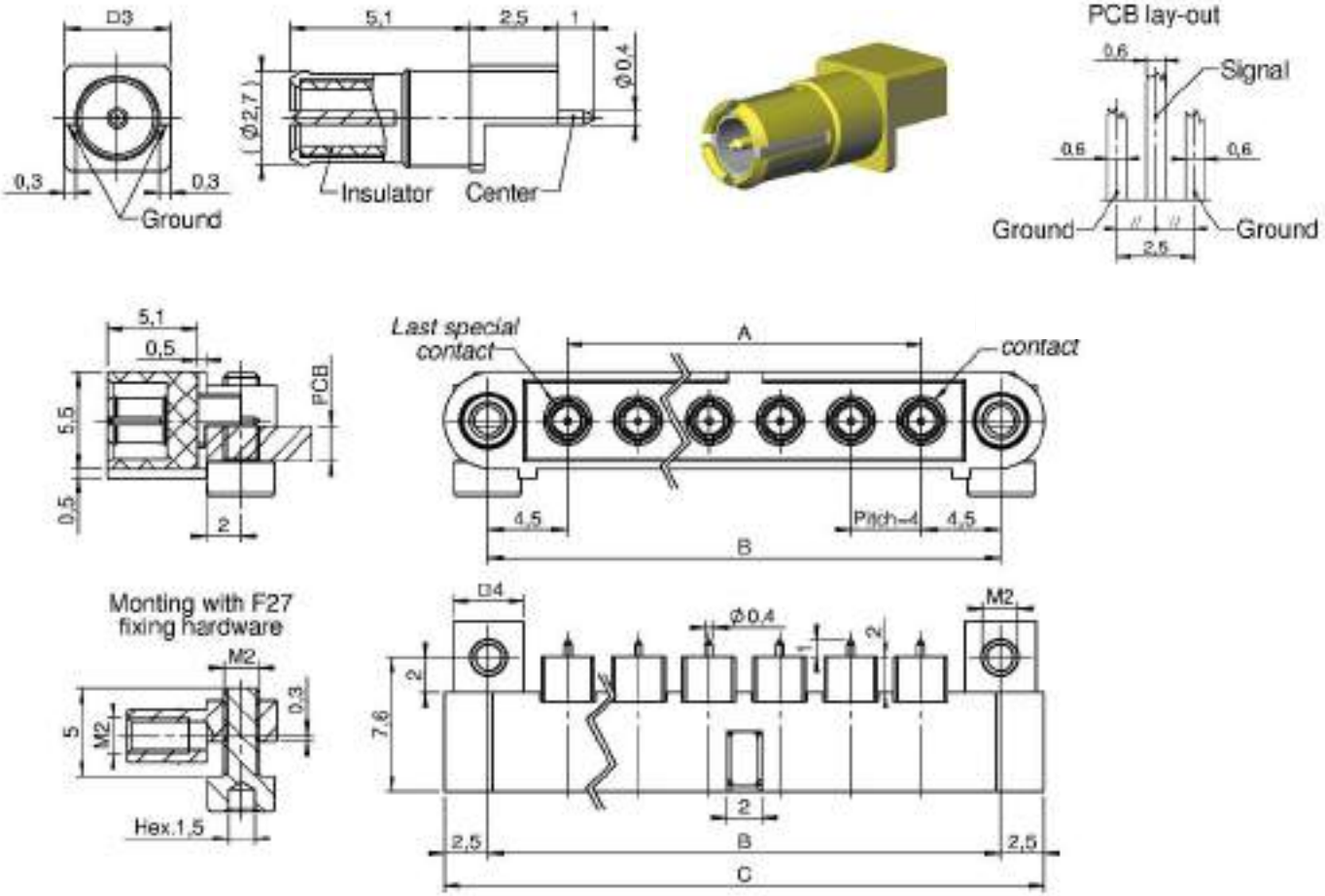

PCB LAYOUT 30-1500-CMM

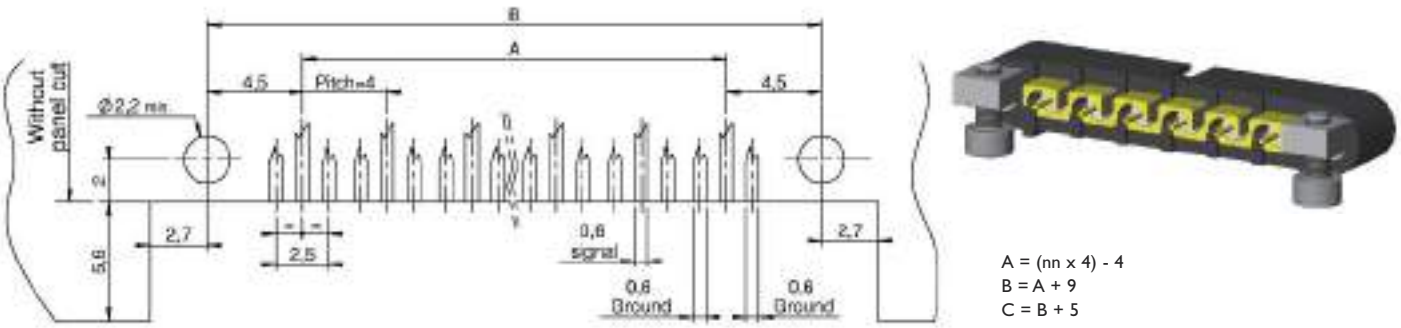

A = (nn x 4) - 4
B = A + 9
C = B + 5

PART NUMBERING

Number of contacts

2 2 I D 0 0 F27 - 0 0 z z - I 5 0 0 C M M

HF : High Frequency contact series 30

MALE 90° SMT FOR CMM 220 SERIES P/N 30-1500-12

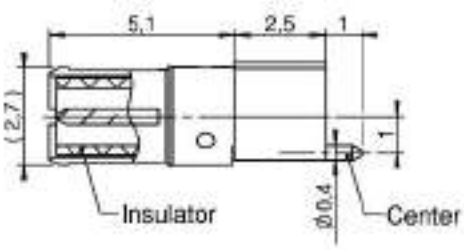

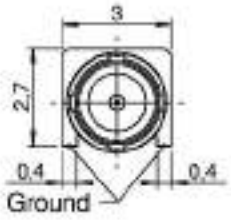

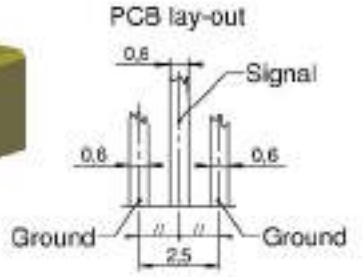

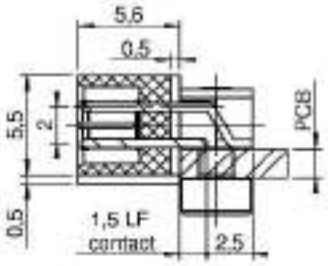

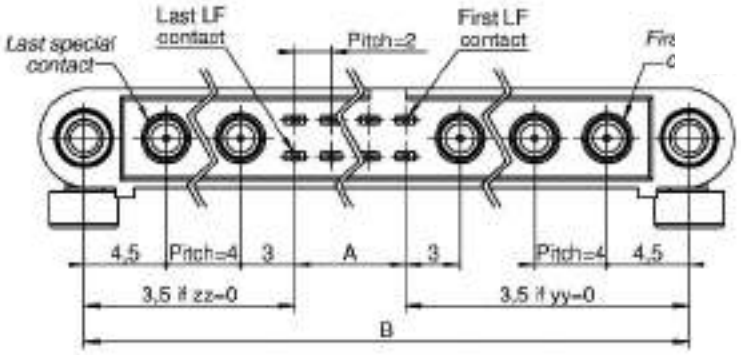

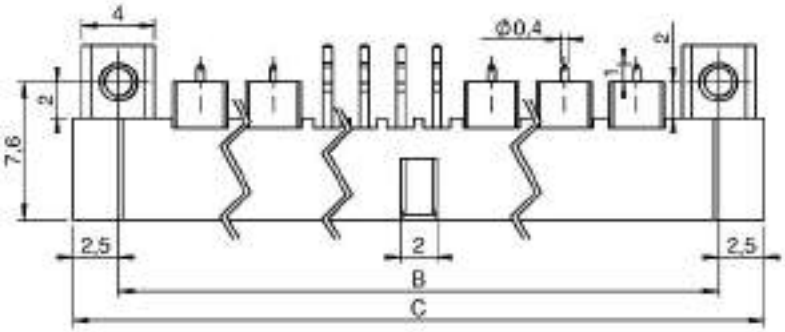

PCB LAYOUT 30-1500-12

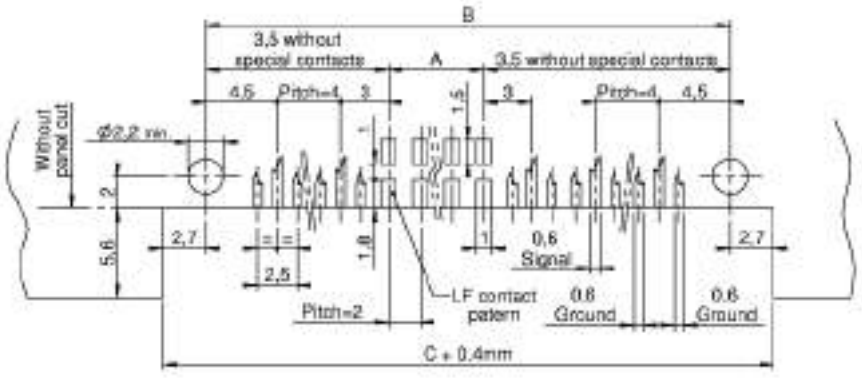

A = nn - 2
B = {(yy + zz) x 4} + A + 7
B max. = 65 mm
C = B + 5

PART NUMBERING

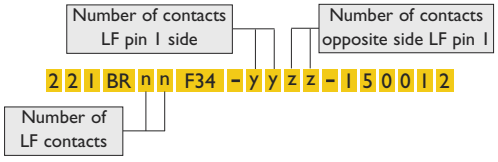

HF : High Frequency contact series 30

MALE 90° SMT FOR CMM 320 SERIES P/N 30-1500-12

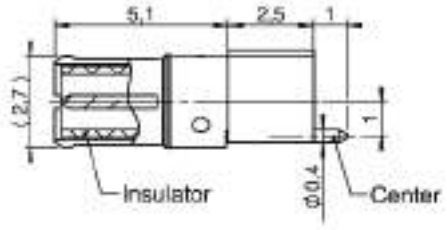

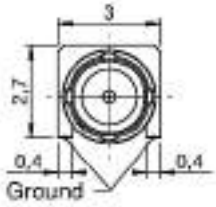

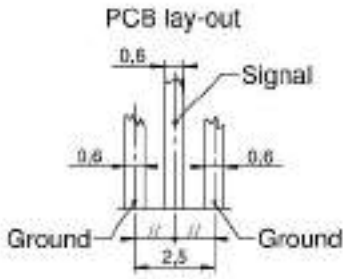

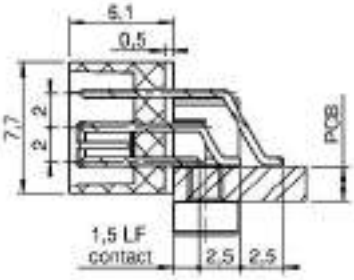

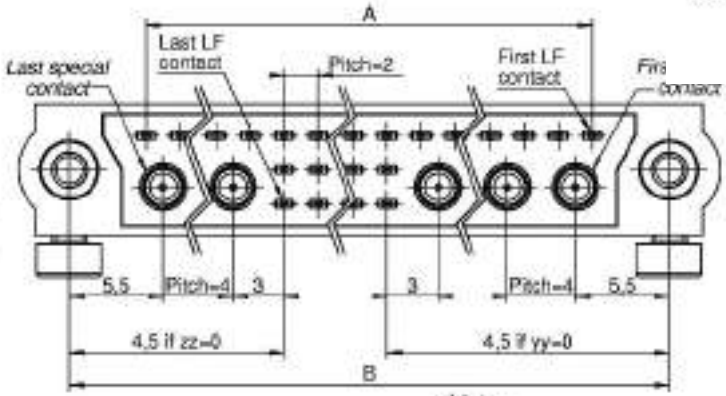

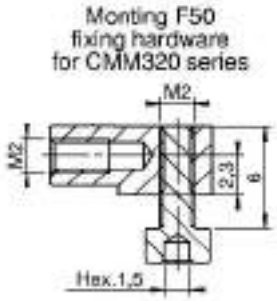

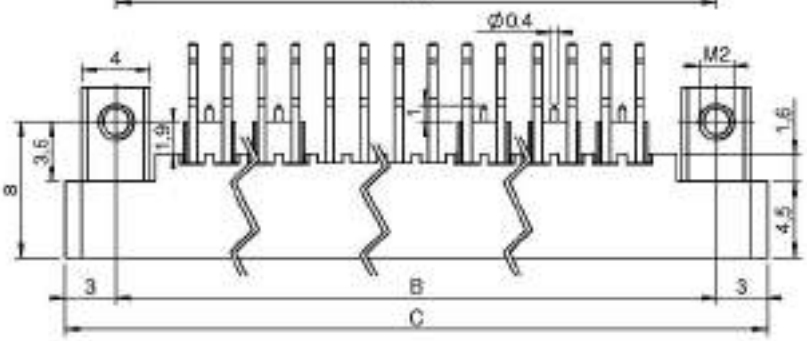

PCB LAYOUT 30-1500-CMM

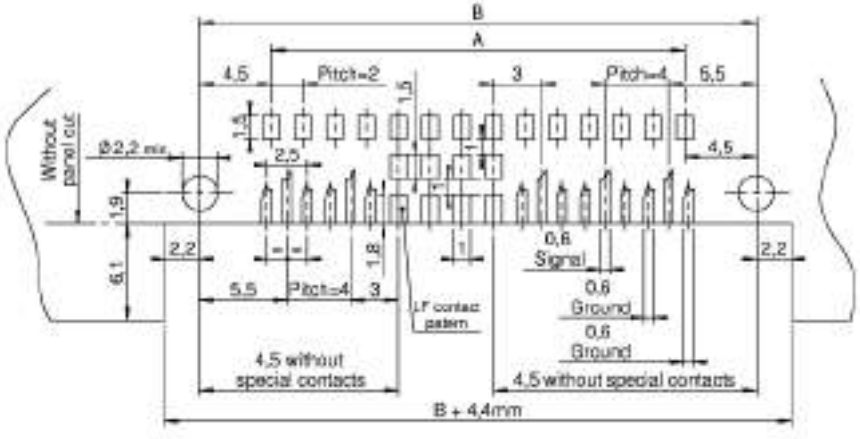

$$A = \left[\frac{\{(yy + zz) \times 4 + nn\} \times 2}{3} \right] - 2$$

B = A + 9
B max. = 87
C = A + 15

PART NUMBERING

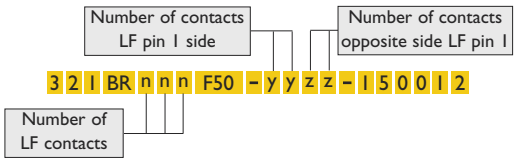

HF : High Frequency contact series 30

MALE STRAIGHT SMT FOR CMM 220 SERIES P/N 30-1600

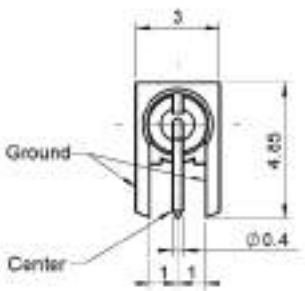

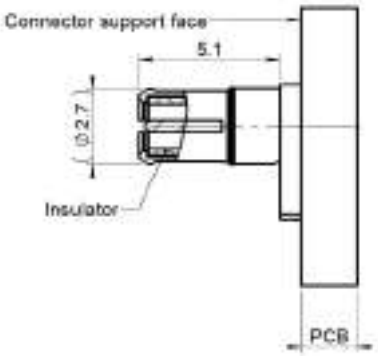

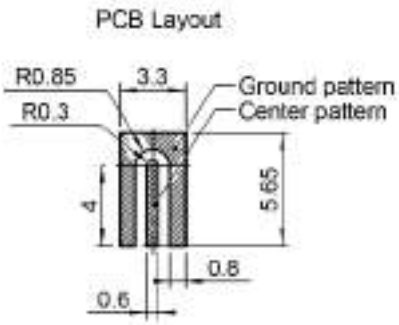

FEMALE STRAIGHT SMT FOR CMM 220 SERIES P/N 30-2600

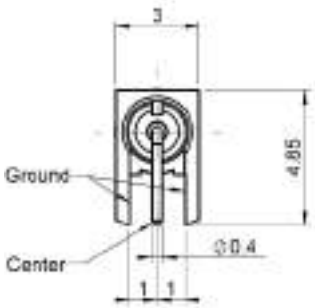

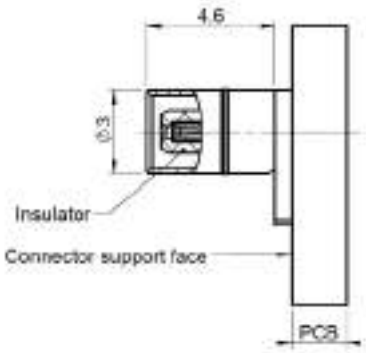

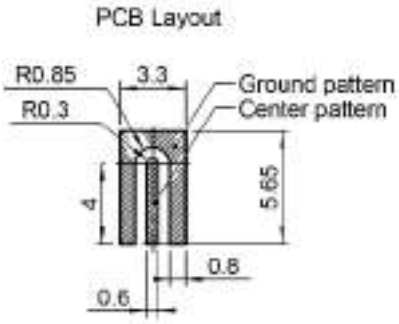

PCB LAYOUT 30-1600 & 30-2600

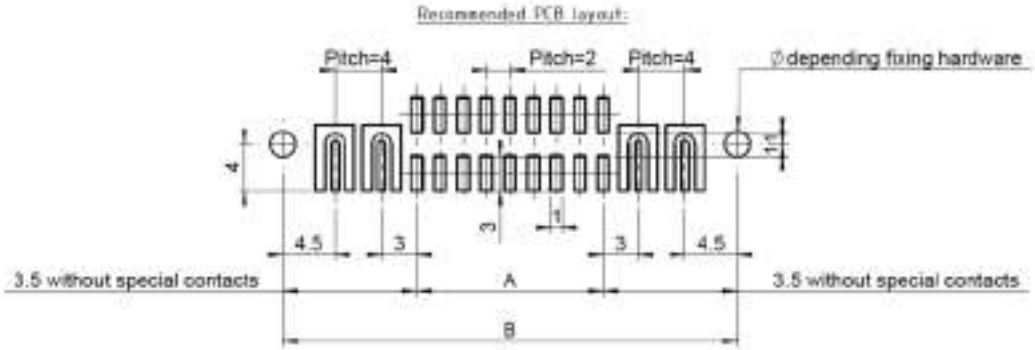

A=nn-2
B=[(yy+zz)x4]+A+7

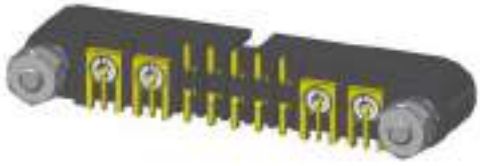

HF : High Frequency contact series 30

MALE STRAIGHT CRIMP ON CABLES Ø 1.2 P/N 30-1312-ZS

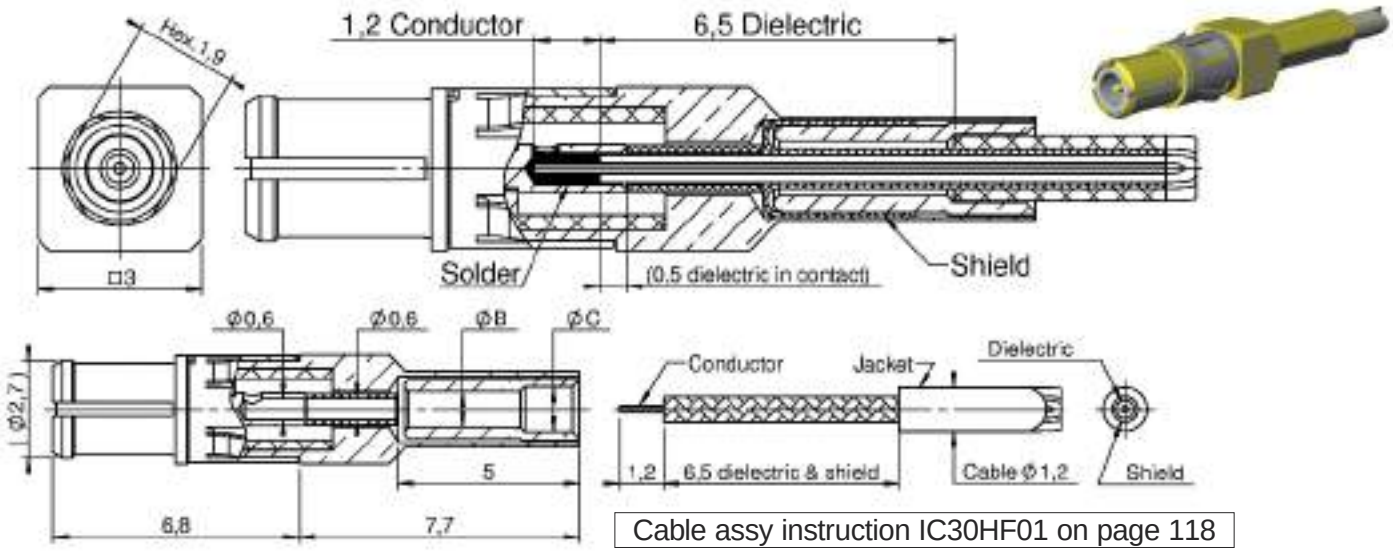

Cable assy instruction IC30HF01 on page 118

Loaded	Unloaded	ØB	ØC	
1312ZS01	30-1312-ZS-01	1 mm	1,25 mm	For cable type NEXANS 50VMTX
1312ZS02	30-1312-ZS-02	0,85 mm	1,15 mm	For cable type AXON SM50

FEMALE STRAIGHT CRIMP ON CABLES Ø 1.2 P/N 30-2312-ZS

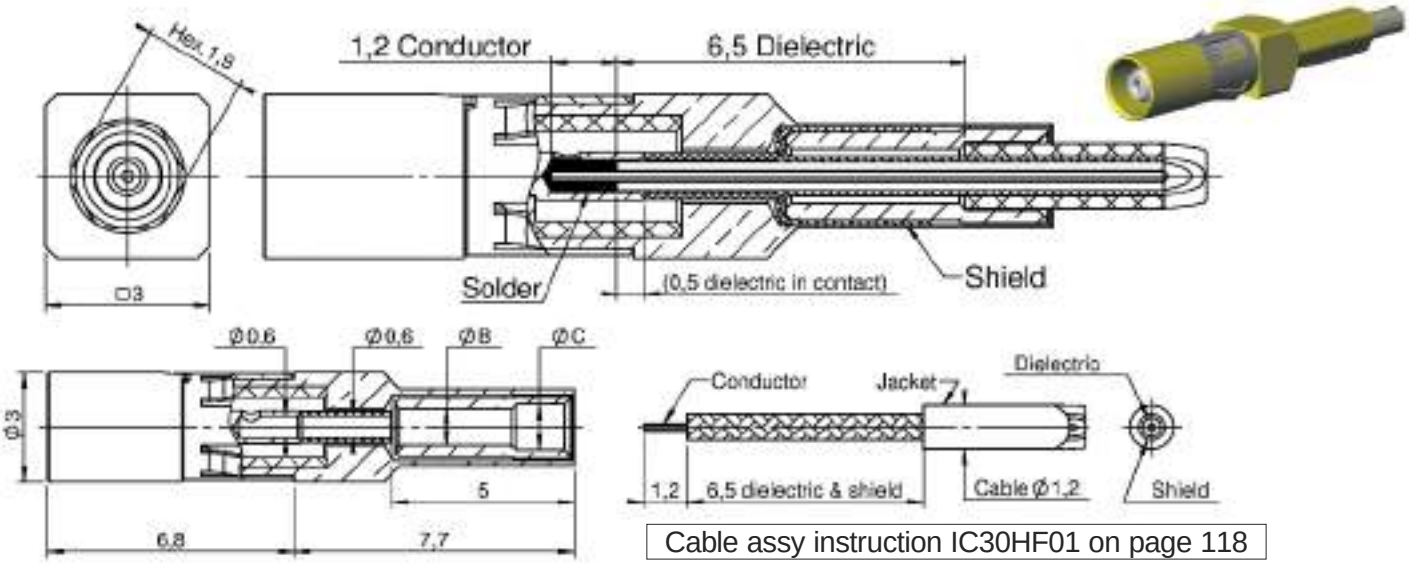

Cable assy instruction IC30HF01 on page 118

Loaded	Unloaded	ØB	ØC	
2312ZS01	30-2312-ZS-01	1 mm	1,25 mm	For cable type NEXANS 50VMTX
2312ZS02	30-2312-ZS-02	0,85 mm	1,15 mm	For cable type AXON SM50

HF : High Frequency contact series 30

MALE STRAIGHT CRIMP ON CABLE P/N 30-13xx-SS & 30-13xx-ZS

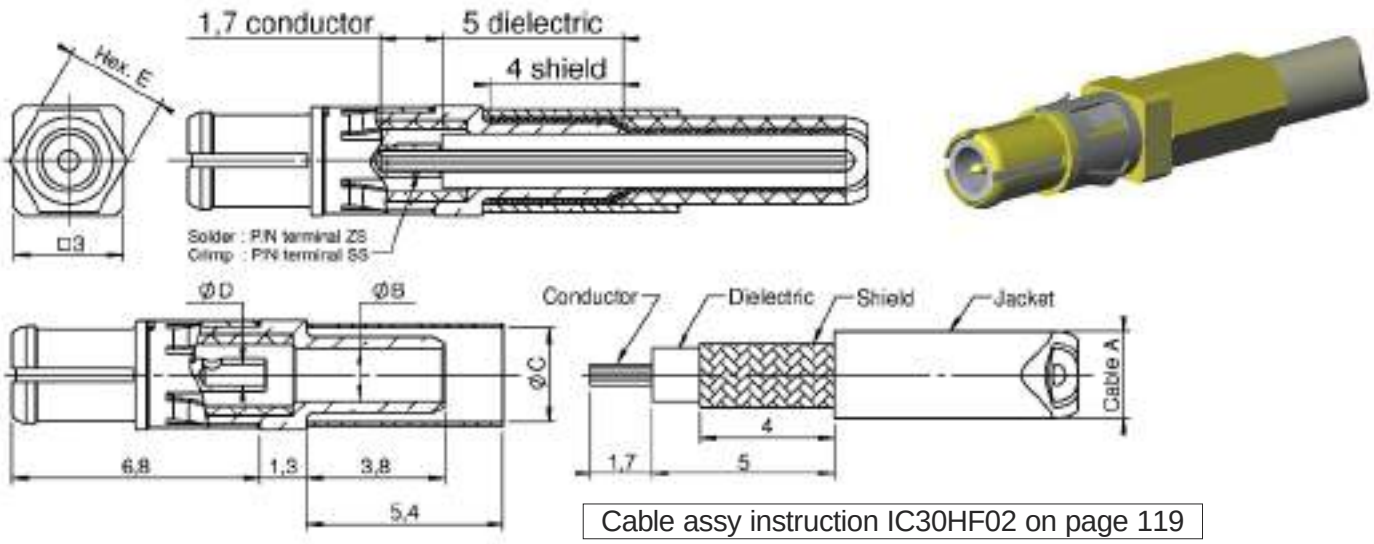

Cable assy instruction IC30HF02 on page 119

Loaded	Unloaded	Cable A	ØB	ØC	ØD	Hex. E
1320SS	30-1320-SS	Ø 2,0	1 mm	2,2 mm	0,5 mm	2,4 on flat
1324SS	30-1324-SS	Ø 2,4	1,5 mm	2,8 mm	0,6 mm	2,8 on flat
1326SS	30-1326-SS	Ø 2,7	1,7 mm	2,8 mm	0,6 mm	2,8 on flat

FEMALE STRAIGHT CRIMP ON CABLE P/N 30-23xx-SS & 30-23xx-ZS

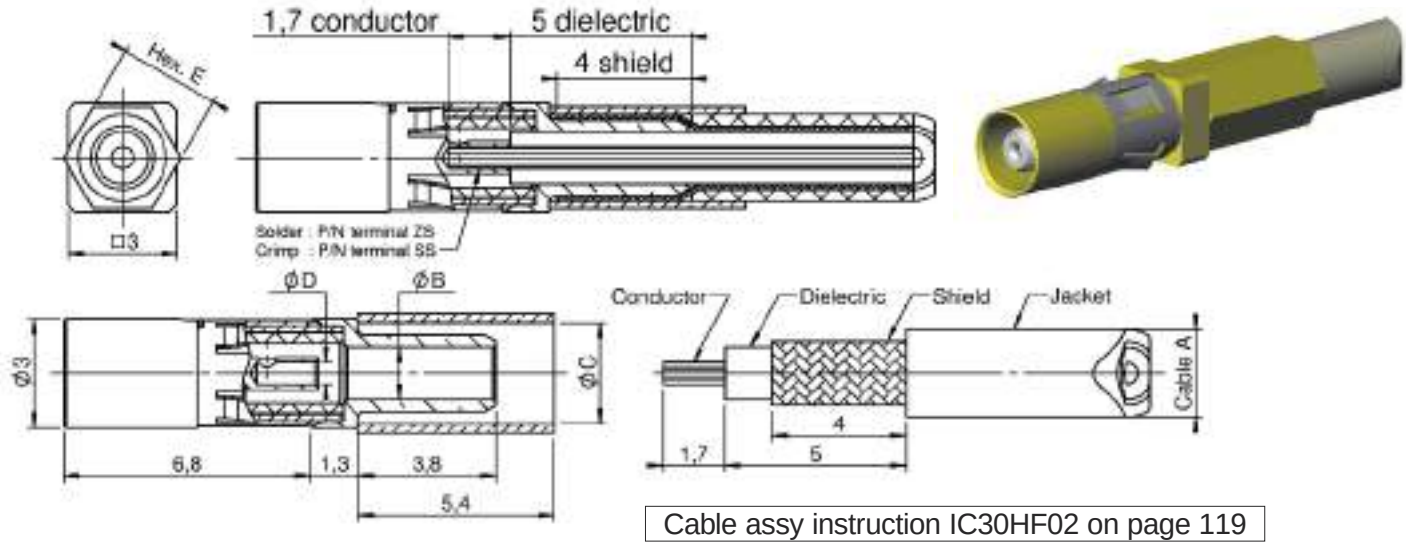

Cable assy instruction IC30HF02 on page 119

Loaded	Unloaded	Cable A	ØB	ØC	ØD	Hex. E
2320SS	30-2320-SS	Ø 2,0	1 mm	2,2 mm	0,5 mm	2,4 on flat
2324SS	30-2324-SS	Ø 2,4	1,5 mm	2,8 mm	0,6 mm	2,8 on flat
2326SS	30-2326-SS	Ø 2,7	1,7 mm	2,8 mm	0,6 mm	2,8 on flat

HF : High Frequency contact series 30

MALE 90° CRIMP ON CABLE P/N 30-14xx-ZS

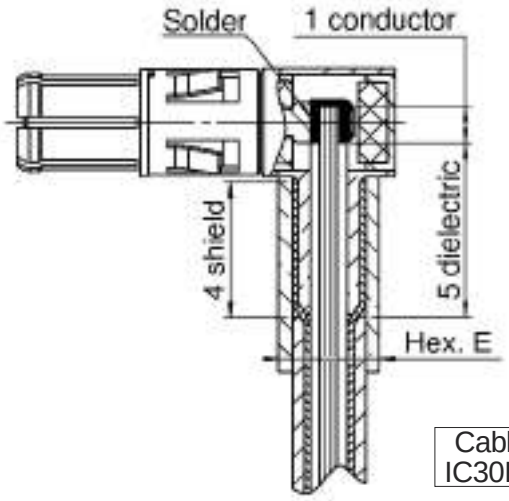

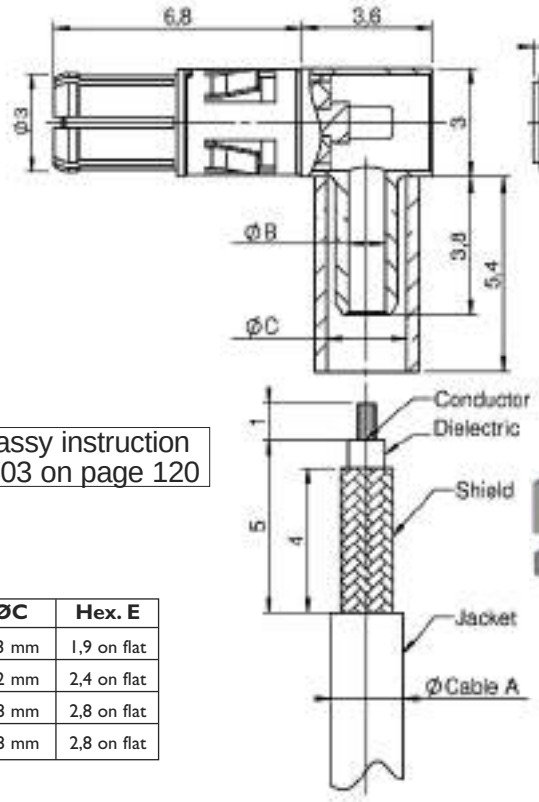

Cable assy instruction
IC30HF03 on page 120

Loaded	Unloaded	Cable A	ØB	ØC	Hex. E
1412ZS	30-1412-ZS	Ø 1,2	0,7 mm	1,3 mm	1,9 on flat
1420ZS	30-1420-ZS	Ø 2,0	1 mm	2,2 mm	2,4 on flat
1424ZS	30-1424-ZS	Ø 2,4	1,5 mm	2,8 mm	2,8 on flat
1426ZS	30-1426-ZS	Ø 2,7	1,7 mm	2,8 mm	2,8 on flat

FEMALE 90° CRIMP ON CABLE P/N 30-24xx-ZS

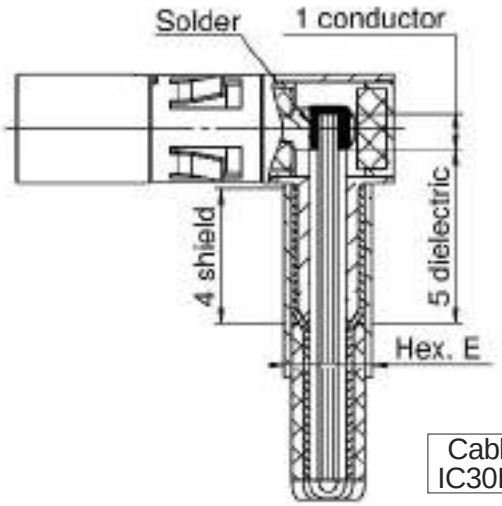

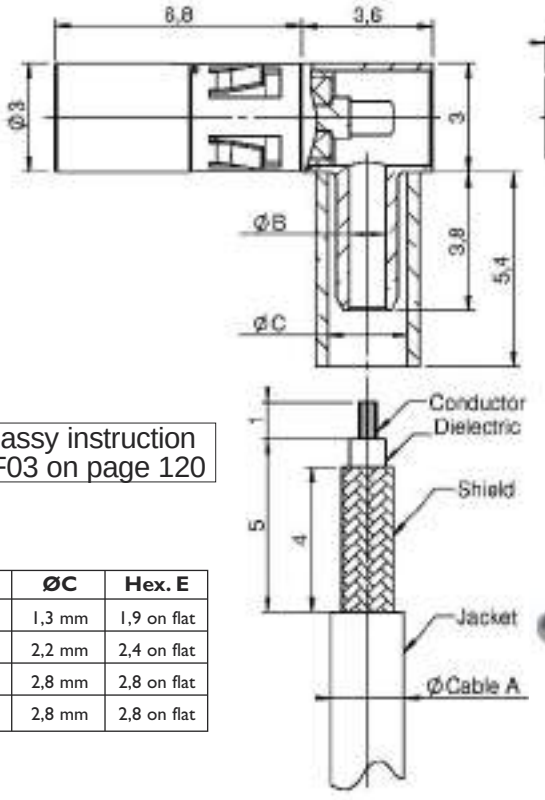

Cable assy instruction
IC30HF03 on page 120

Loaded	Unloaded	Cable A	ØB	ØC	Hex. E
2412ZS	30-2412-ZS	Ø 1,2	0,7 mm	1,3 mm	1,9 on flat
2420ZS	30-2420-ZS	Ø 2,0	1 mm	2,2 mm	2,4 on flat
2424ZS	30-2424-ZS	Ø 2,4	1,5 mm	2,8 mm	2,8 on flat
2426ZS	30-2426-ZS	Ø 2,7	1,7 mm	2,8 mm	2,8 on flat

HF : High Frequency contact series 30

MALE STRAIGHT ON CABLE SEMI-RIGID P/N 30-13xx-ZZ

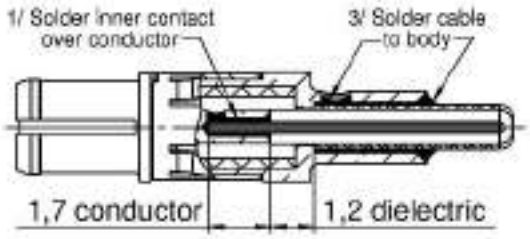

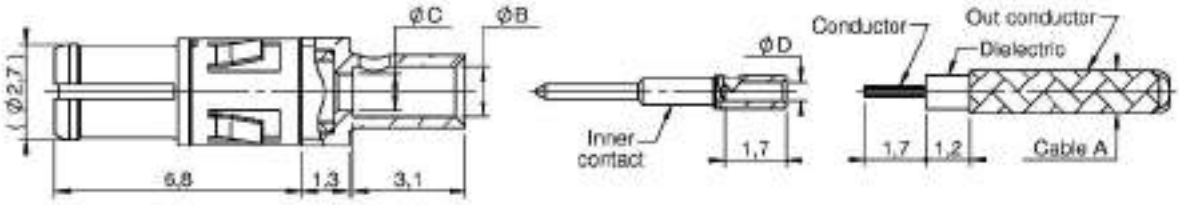

MONTING PROCESS :
1/ Solder inner contact over conductor.
2/ Push cable with inner contact in body.
3/ Solder cable to body. (Tooling reference C14777)

Loaded	Unloaded	Cable A	ØB	ØC	ØD
1347ZZ	30-1347-ZZ	UT 47	1,4 mm	1 mm	0,5 mm
1385ZZ	30-1385-ZZ	UT 85	2,3 mm	1,7 mm	0,6 mm

FEMALE STRAIGHT ON CABLE SEMI-RIGID P/N 30-23xx-ZZ

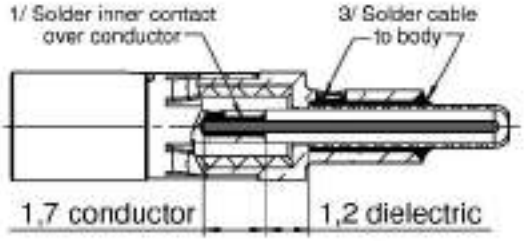

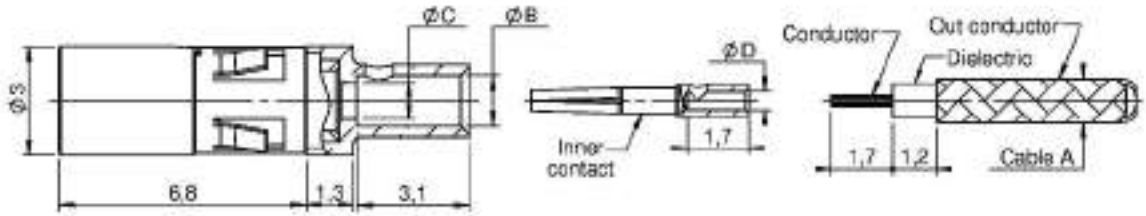

MONTING PROCESS :
1/ Solder inner contact over conductor.
2/ Push cable with inner contact in body.
3/ Solder cable to body. (Tooling reference C14777)

Loaded	Unloaded	Cable A	ØB	ØC	ØD
2347ZZ	30-2347-ZZ	UT 47	1,4 mm	1 mm	0,5 mm
2385ZZ	30-2385-ZZ	UT 85	2,3 mm	1,7 mm	0,6 mm

HF : High Frequency contact series 30

MALE 90° ON CABLE SEMI-RIGID P/N 30-14xx-ZZ

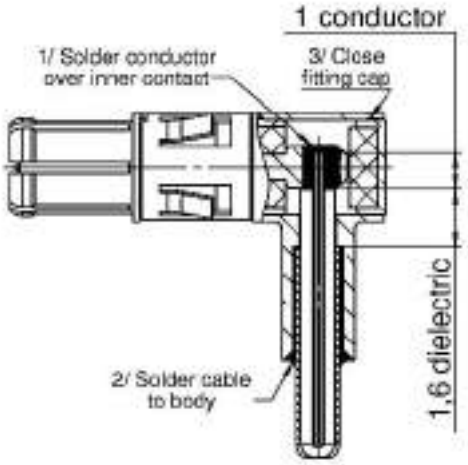

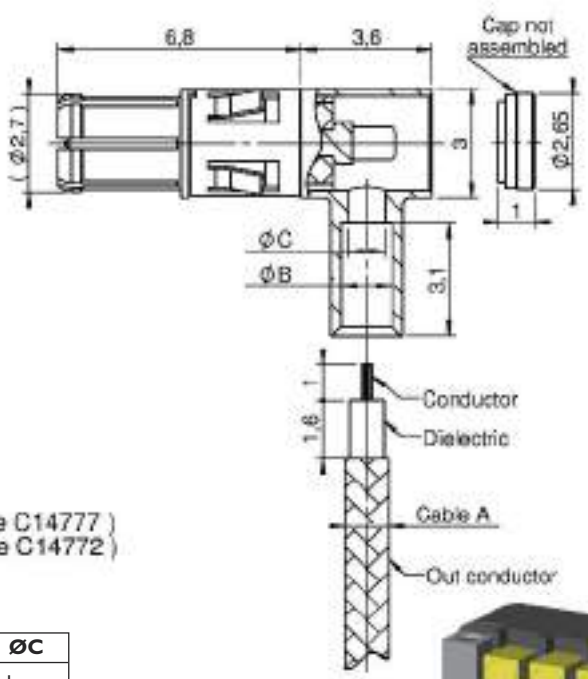

MONTING PROCESS :
1/ Solder conductor over inner contact.
2/ Solder cable to body. (Tooling reference C14777)
3/ Assembly the cap to body (Tooling reference C14772)

Loaded	Unloaded	Cable A	ØB	ØC
1447ZZ	30-1447-ZZ	UT 47	1,4 mm	1 mm
1485ZZ	30-1485-ZZ	UT 85	2,3 mm	1,7 mm

FEMALE 90° ON CABLE SEMI-RIGID P/N 30-24xx-ZZ

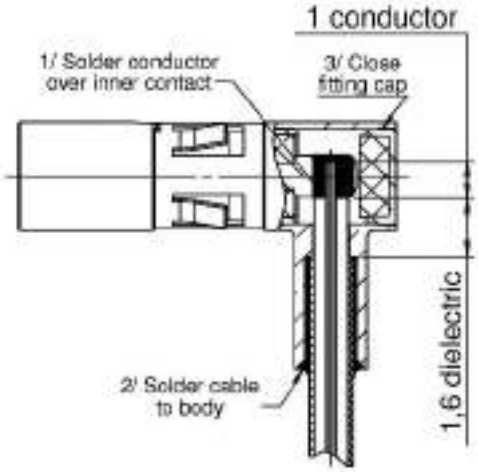

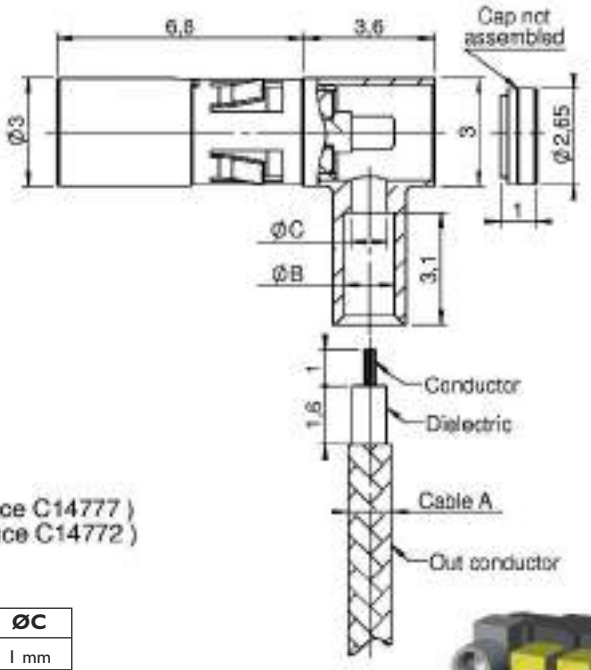

MONTING PROCESS :
1/ Solder conductor over inner contact.
2/ Solder cable to body. (Tooling reference C14777)
3/ Assembly the cap to body (Tooling reference C14772)

Loaded	Unloaded	Cable A	ØB	ØC
2447ZZ	30-2447-ZZ	UT 47	1,4 mm	1 mm
2485ZZ	30-2485-ZZ	UT 85	2,3 mm	1,7 mm

HP : High Power contact series 30

MALE STRAIGHT ON PCB P/N 30-3300-XX

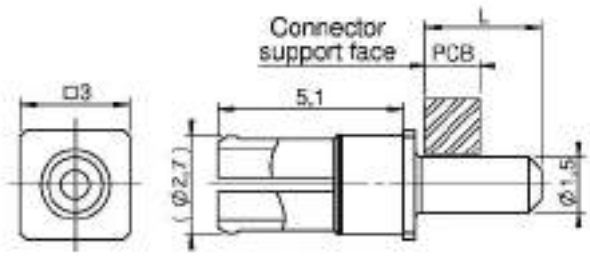

Loaded	Length L
3300CMM	3 mm
330045	4,5 mm

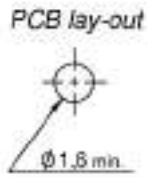

FEMALE STRAIGHT ON PCB P/N 30-4300-XX

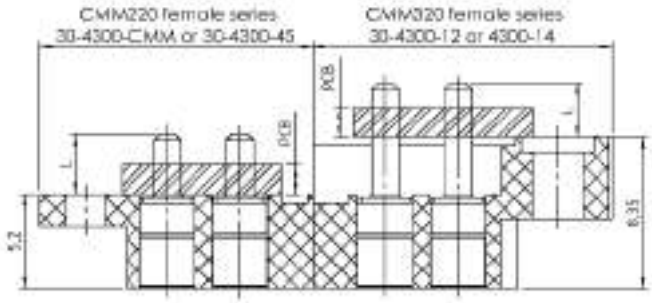

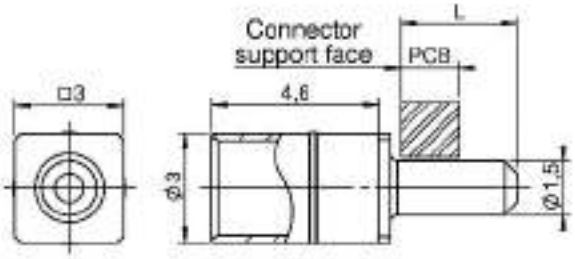

Loaded	Length L
4300CMM	3 mm
430045	4,5 mm

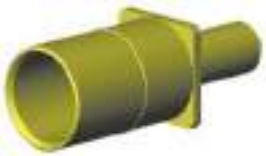

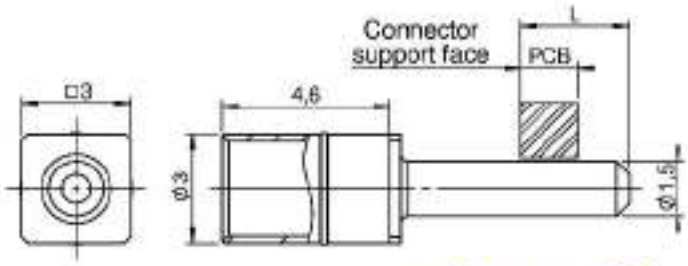

Loaded	Length L
430012	3 mm
430014	4,5 mm

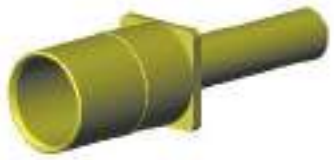

PCB LAYOUT 30-3300-XX & 30-4300-XX

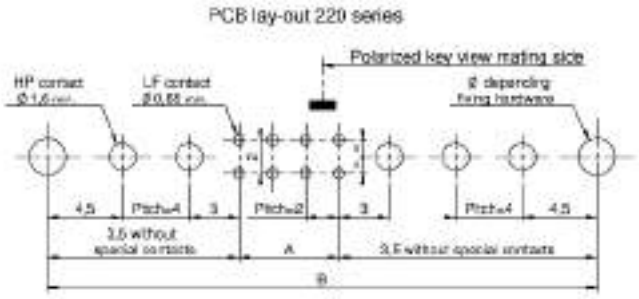

A = nn - 2
B = {(yy + zz) x 4} + A + 7
B max. = 65 mm

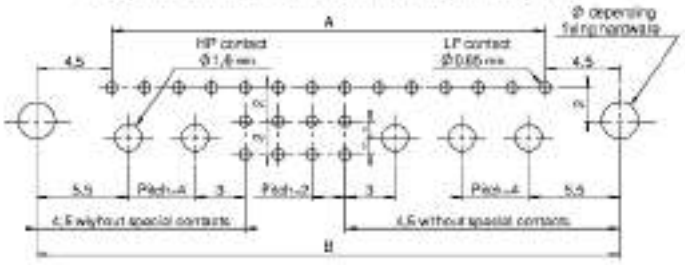

$$A = \left[\frac{\{(yy + zz) \times 4 + nn\} \times 2}{3}\right] - 2$$

B = A + 9
B max. = 87

HP : High Power contact series 30

MALE 90° PCB P/N 30-3400-XX

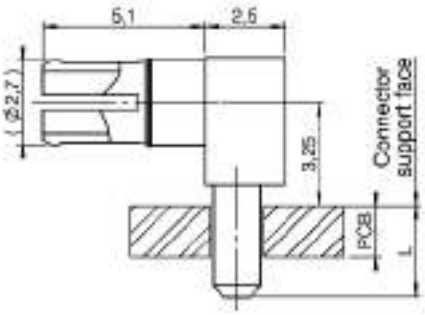

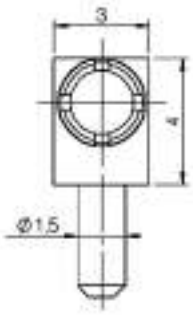

Loaded	Length L
3400CMM	3 mm
340045	4,5 mm

PCB LAYOUT 30-3400-XX

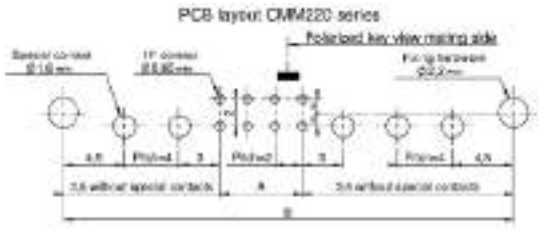

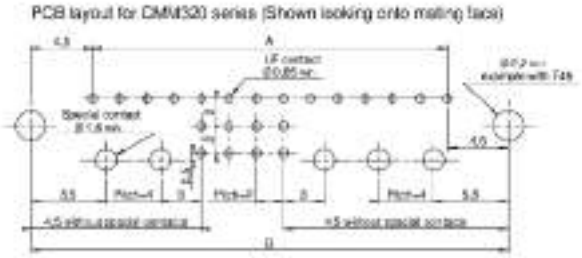

FEMALE 90° PCB P/N 30-4400-XX

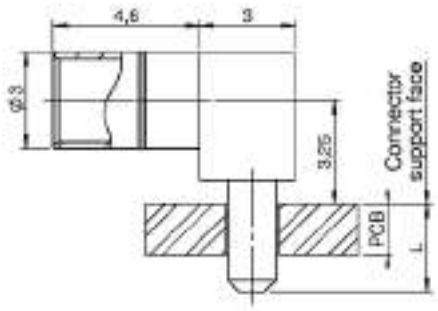

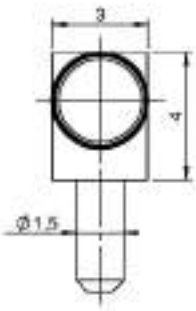

Loaded	Length L
4400CMM	3 mm
440045	4,5 mm

PCB LAYOUT 30-4400-XX

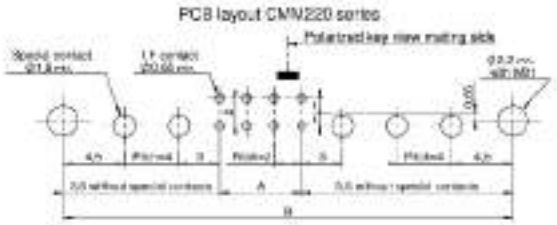

A = nn - 2
B = {(yy + zz) x 4} + A + 7
B max. = 65 mm

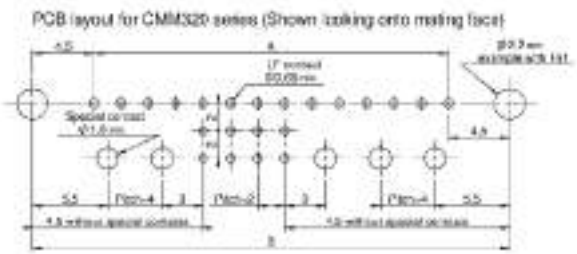

$$A = \left[\frac{\{(yy+zz)\times 4+nn\}\times 2}{3}\right] - 2$$

B = A + 9
B max. = 87

HP : High Power contact series 30

MALE 90° SMT 30-3500

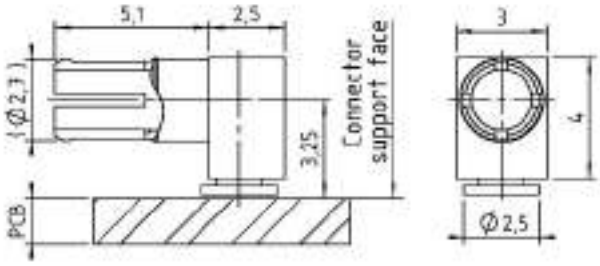

PCB LAYOUT 30-3500

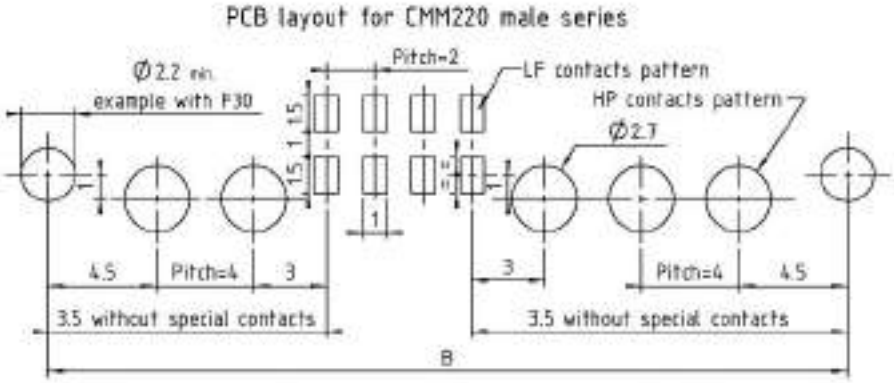

FEMALE 90° SMT 30-4500

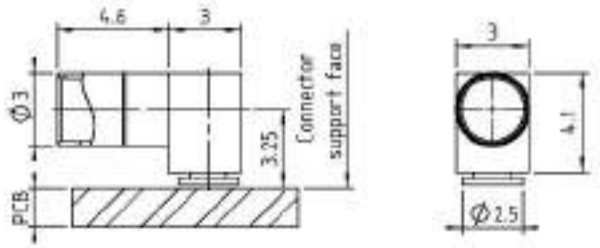

PCB LAYOUT 30-4500

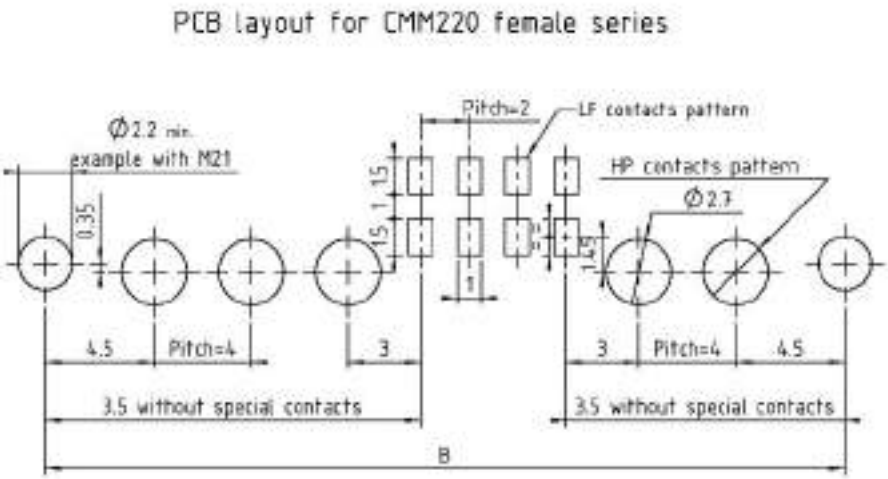

HP : High Power contact series 30

MALE STRAIGHT SMT P/N 30-3600

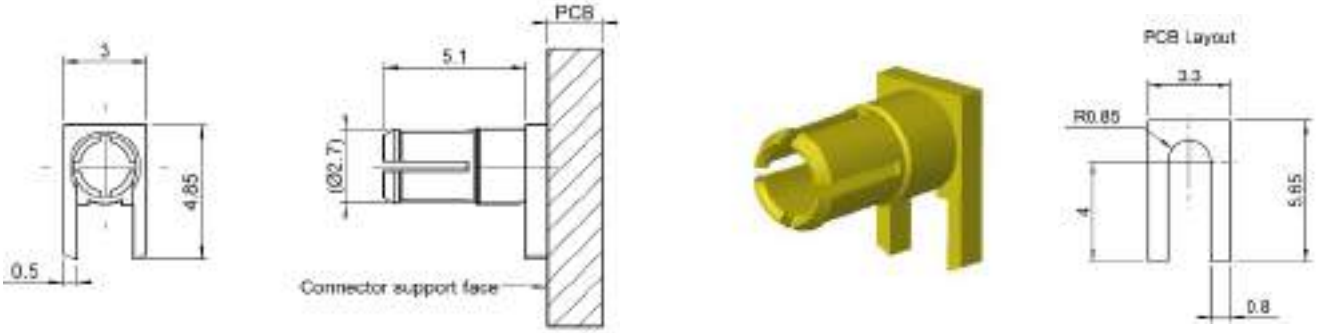

PCB LAYOUT 30-3600

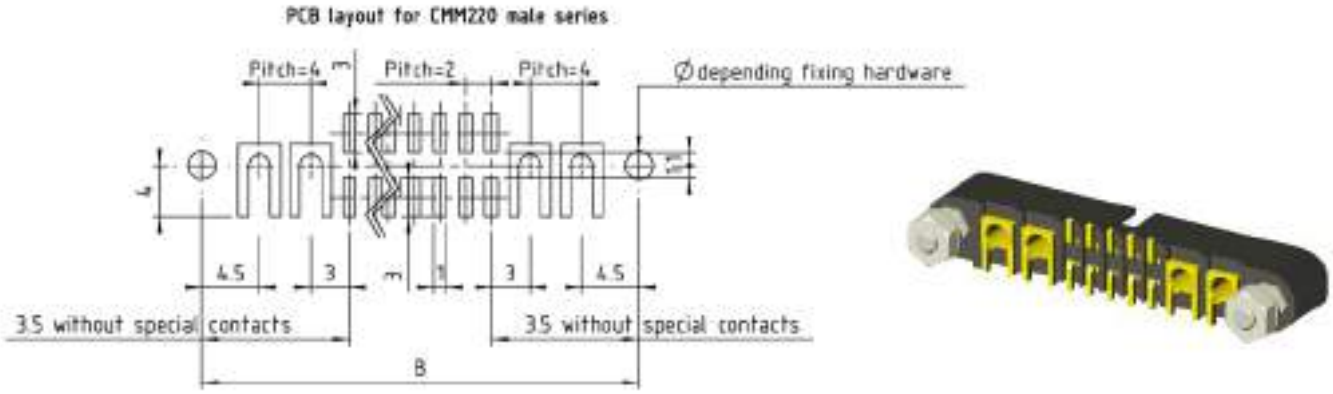

FEMALE STRAIGHT SMT P/N 30-4600

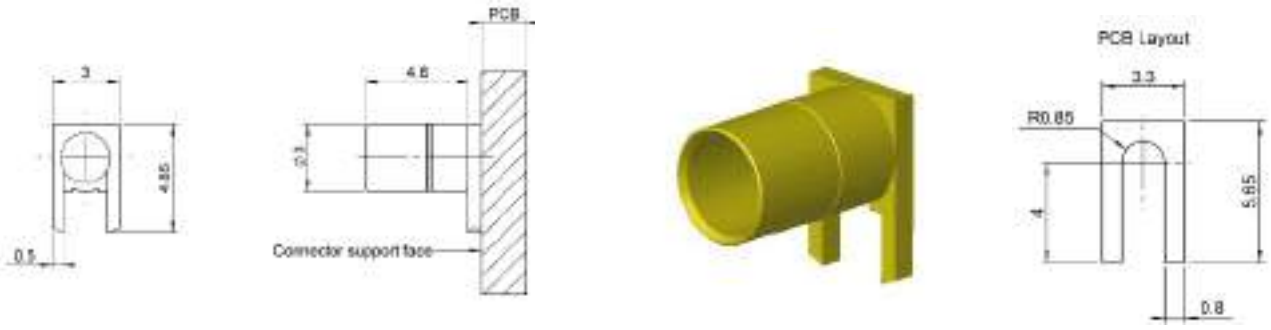

PCB LAYOUT 30-4600

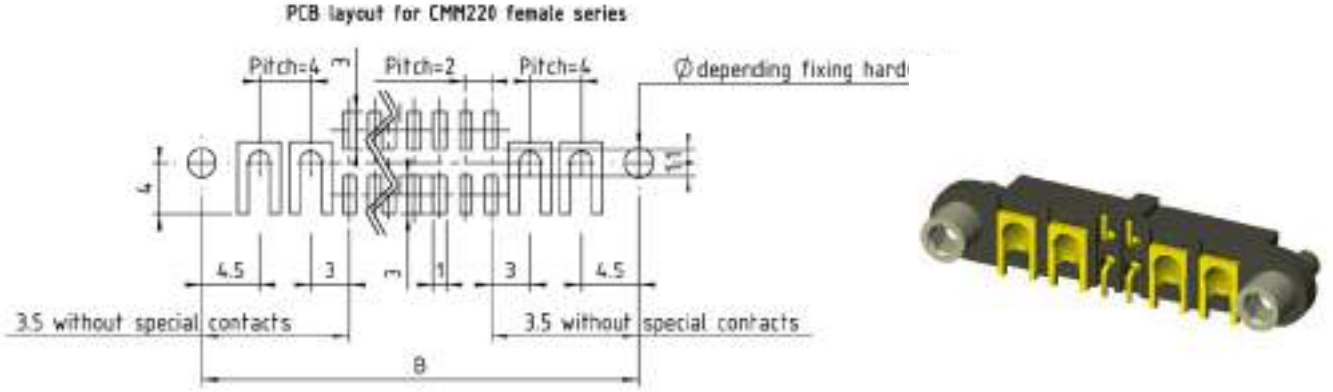

HP : High Power contact series 30

MALE 90° SMT CARD EDGE (WITHOUT LF CONTACTS) 30-3500-CMM

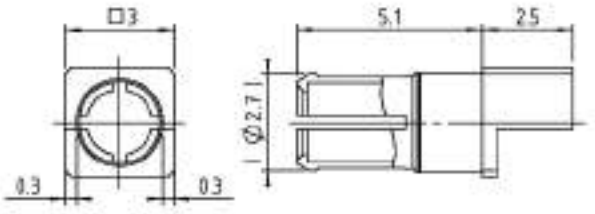

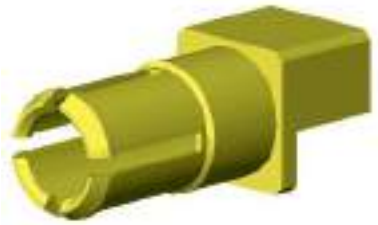

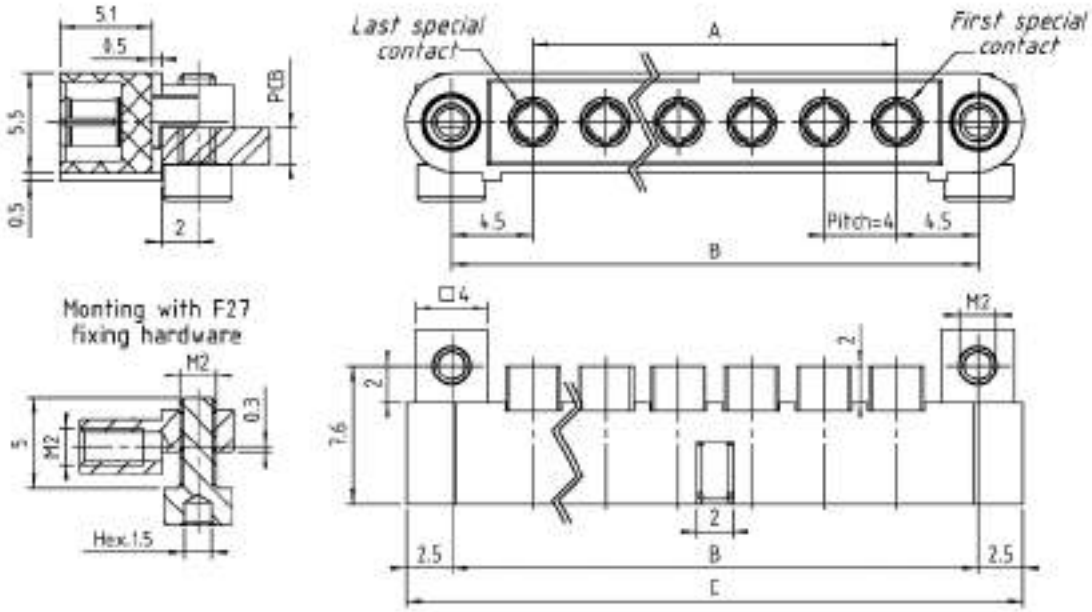

PCB LAYOUT 30-3500-CMM

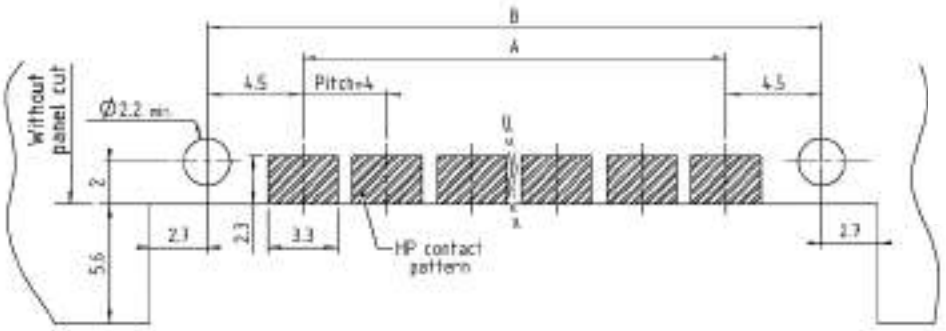

A = (nn x 4) - 4
B = A + 9
C = B + 5

PART NUMBERING

Number of contacts

2 2 I D 0 0 F27 - 0 0 z z - 3 5 0 0 C M M

HP : High Power contact series 30

MALE 90° SMT CARD EDGE 30-3500-12 (FOR CMM 220 SERIES)

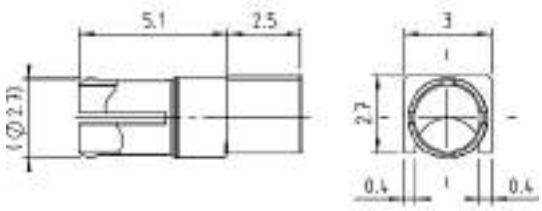

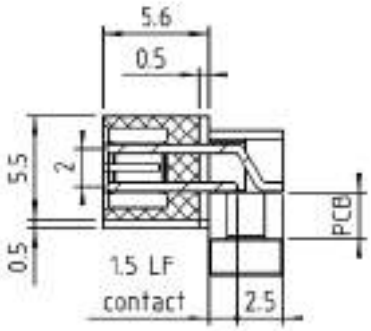

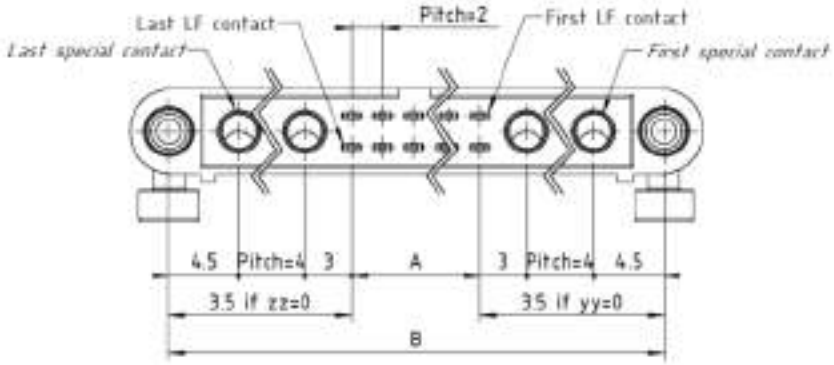

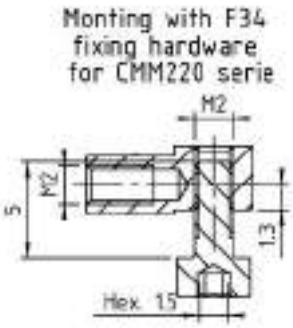

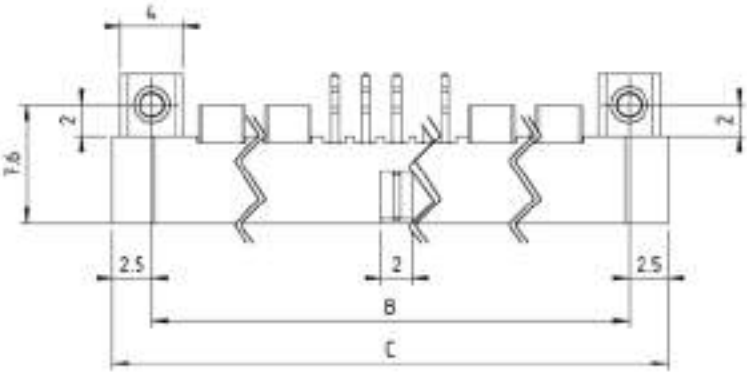

PCB LAYOUT 30-3500-12

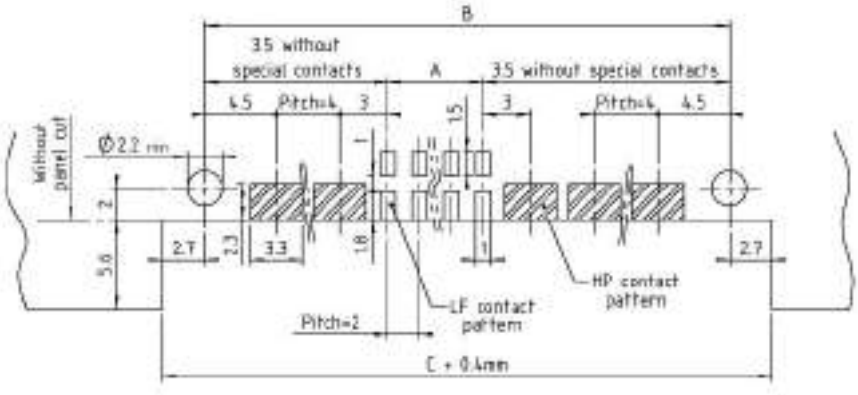

A = nn - 2
B = {(yy + zz) x 4} + A + 7
B max. = 65 mm
C = B + 5

PART NUMBERING

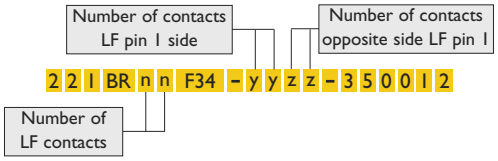

HP : High Power contact series 30

MALE 90° SMT CARD EDGE 30-3500-12 (FOR CMM 320 SERIES)

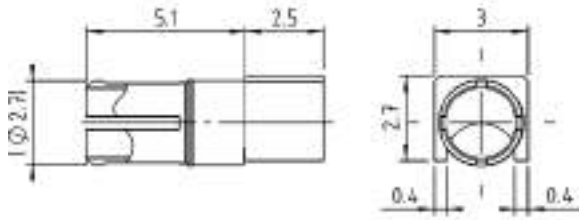

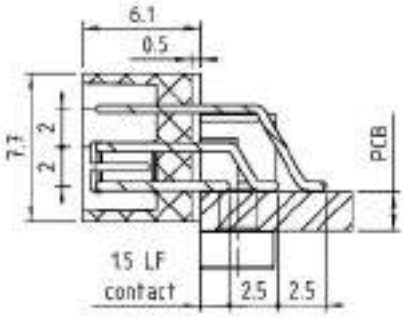

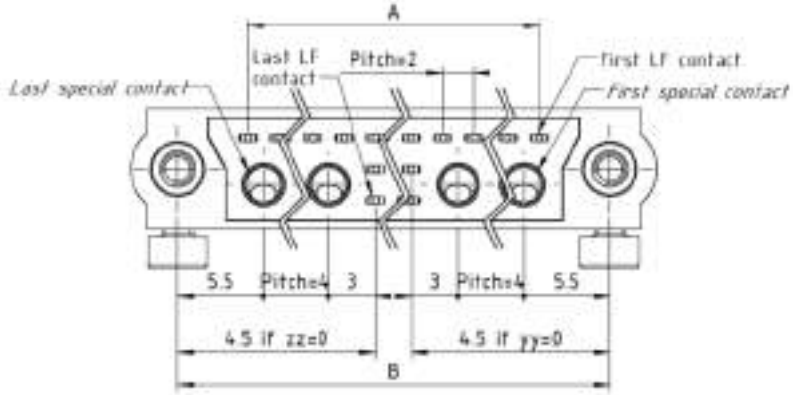

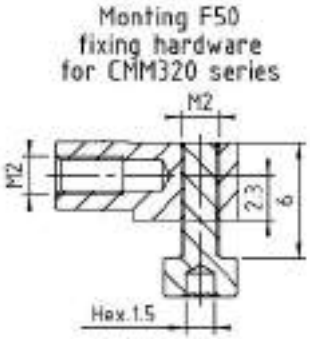

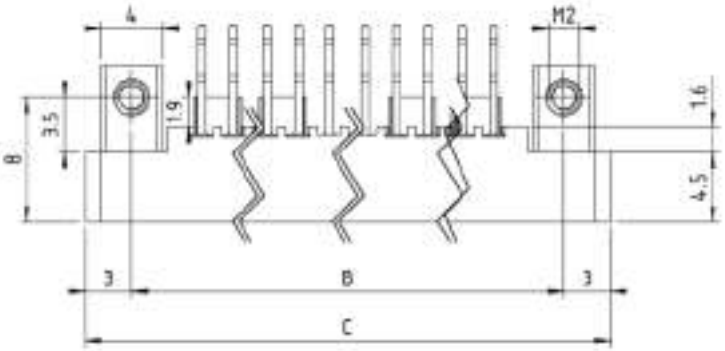

PCB LAYOUT 30-3500-12

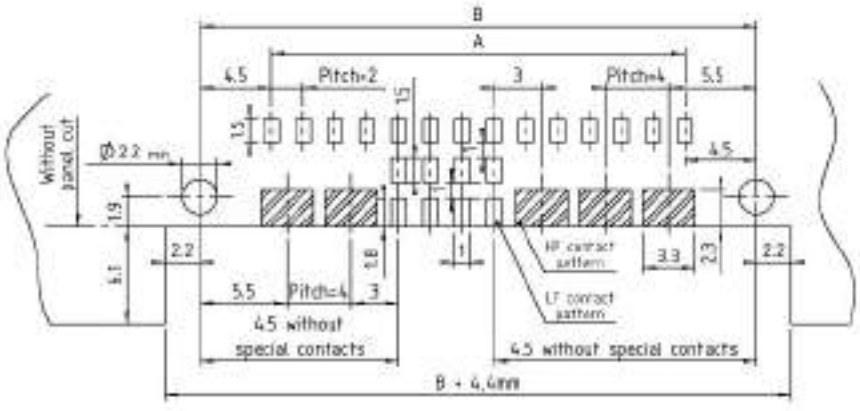

$$A = \left[\frac{\{(yy+zz)\times 4+nn\}\times 2}{3}\right] - 2$$

B = A + 9
B max. = 87
C = A + 15

PART NUMBERING

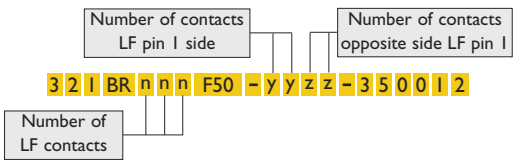

HP : High Power contact series 30

MALE STRAIGHT ON CABLE P/N 30-33xx (solder or crimp)

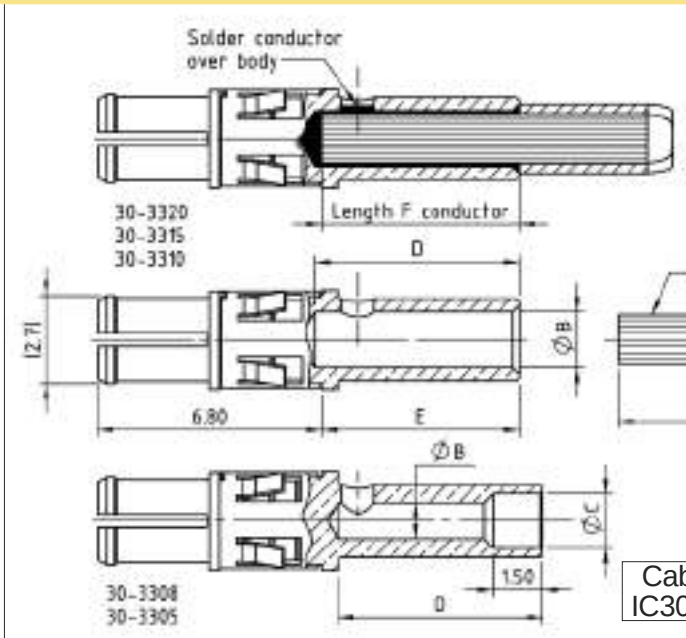

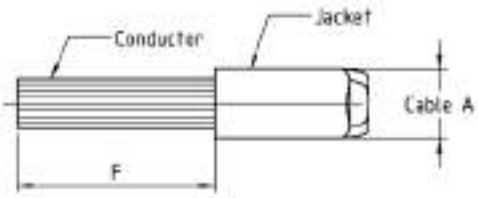

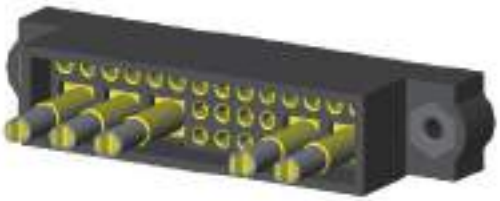

Cable assy instruction IC30HP02 on page 122

Loaded	Unloaded	Ampere	Cable A					ØB	ØC	Length D hole	Length E body	Length F conductor	Solder	Crimp by HX3 Hexagone size/Dies	Crimp by AF8
			AWG 20	AWG 18	AWG 16	AWG 14	AWG 12								
3305	30-3305	5A	X					1,1 mm	1,65 mm	6,2 mm	6,7 mm	4,5 mm	OK	Hex. 1,9 mm/C14923	OK
3308	30-3308	8A		X				1,35 mm	1,85 mm	6,2 mm	6,7 mm	4,5 mm	OK	Hex. 1,9 mm/C14923	OK
3310	30-3310	10A	X	X	X			1,7 mm		6,2 mm	6 mm	6 mm	OK		OK
3315	30-3315	15A				X		2 mm		6,2 mm	6 mm	6 mm	OK		OK
3320	30-3320	20A					X	2,6 mm		5,5 mm	6 mm	5,3 mm	OK		OK

FEMALE STRAIGHT ON CABLE P/N 30-43xx (solder or crimp)

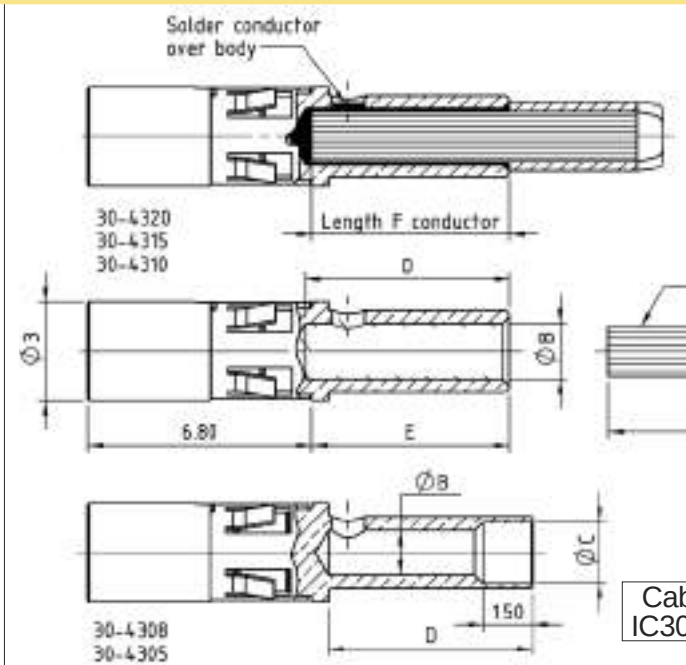

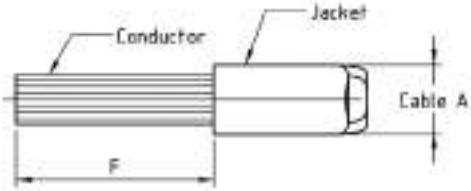

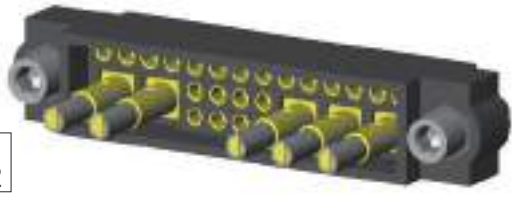

Cable assy instruction IC30HP02 on page 122

Loaded	Unloaded	Ampere	Cable A					ØB	ØC	Length D hole	Length E body	Length F conductor	Solder	Crimp by HX3 Hexagone size/Dies	Crimp by AF8
			AWG 20	AWG 18	AWG 16	AWG 14	AWG 12								
4305	30-4305	5A	X					1,1 mm	1,65 mm	6,2 mm	6,7 mm	4,5 mm	OK	Hex. 1,9 mm/C14923	OK
4308	30-4308	8A		X				1,35 mm	1,85 mm	6,2 mm	6,7 mm	4,5 mm	OK	Hex. 1,9 mm/C14923	OK
4310	30-4310	10A	X	X	X			1,7 mm		6,2 mm	6 mm	6 mm	OK		OK
4315	30-4315	15A				X		2 mm		6,2 mm	6 mm	6 mm	OK		OK
4320	30-4320	20A					X	2,6 mm		5,5 mm	6 mm	5,3 mm	OK		OK

HF : High Frequency contacts series 22
HP : High Power contacts series 22

FOR CMM 340

INSERTION

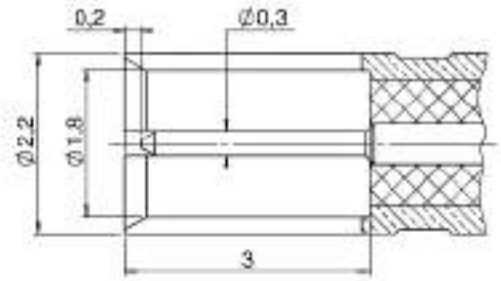

HF female contact insertion

The special contact gender is determined by the body and not by the central contact

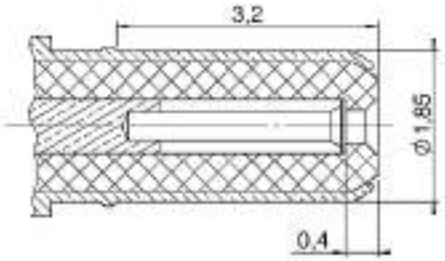

HF male contact insertion

PART NUMBERING FOR PCB HF & HP SPECIAL CONTACTS

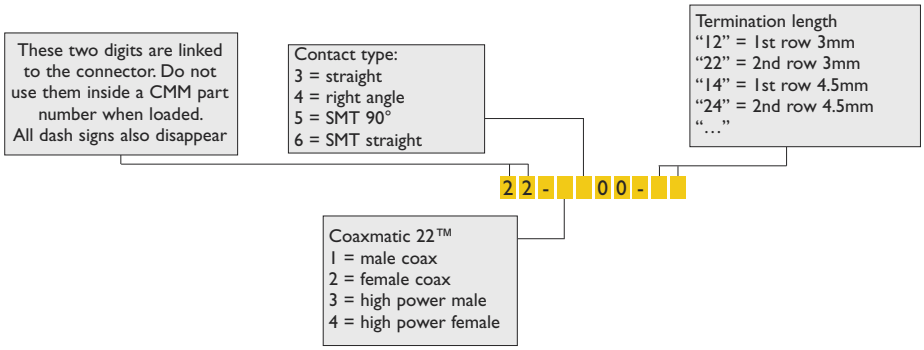

PART NUMBERING FOR HF & HP SPECIAL CONTACTS ON-CABLE

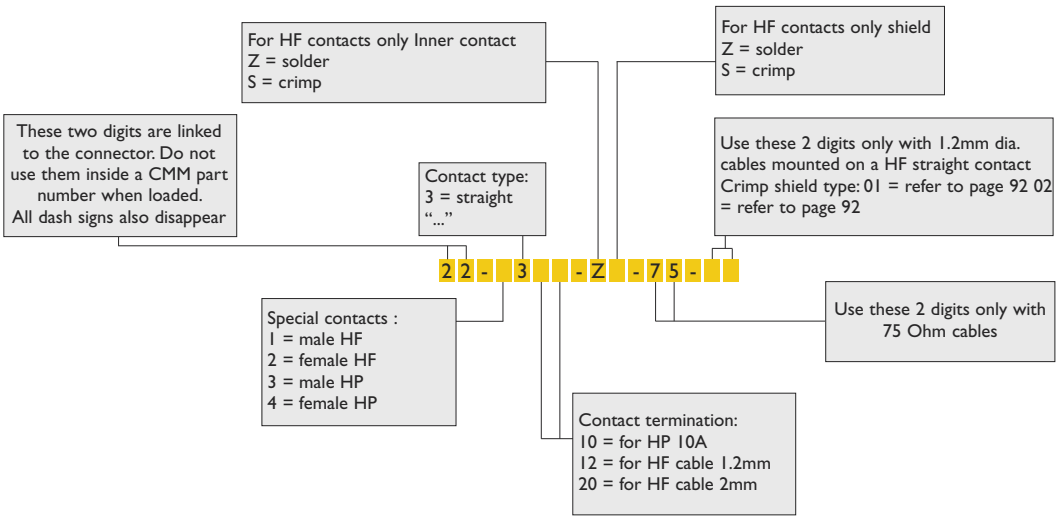

HF : High Frequency contacts series 22

MALE STRAIGHT ON PCB P/N 22-1300-xx

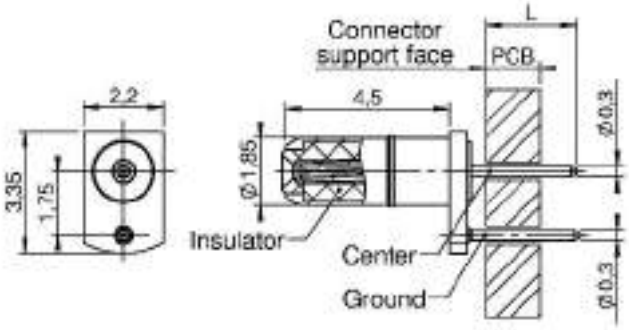

Loaded	Length L
130012	3 mm
130014	4,5 mm

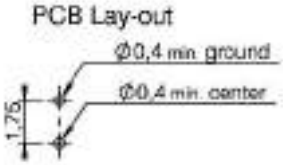

FEMALE STRAIGHT ON PCB P/N 22-2300-xx

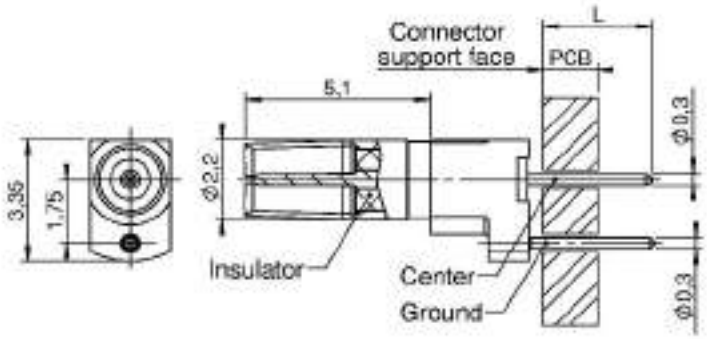

Loaded	Length L
230012	3 mm
230014	4,5 mm

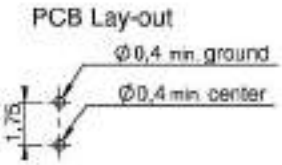

PCB LAYOUT 22-1300-xx & 22-2300-xx

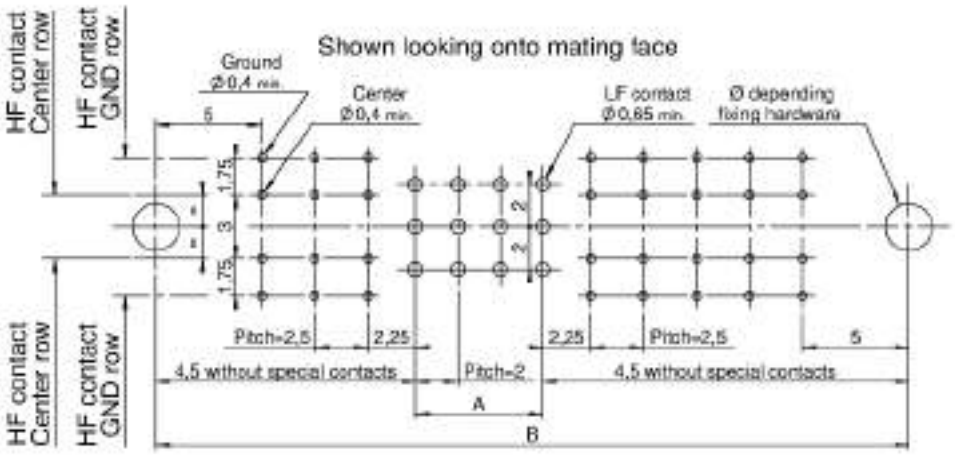

$$A = \left\{\frac{(nnx2)}{3}\right\} - 2$$

if yy and zz ≠ 0 :

$$B = \left\{\left(\frac{(yy)+(zz)}{2}\right)-2\right\} \times 2{,}5+14{,}5+A$$

if yy or zz = 0 :

$$B = \left\{\left(\frac{(yy)\text{ or }(zz)}{2}\right)-1\right\} \times 2{,}5+11{,}75+A$$

B max. = 87

HF : High Frequency contacts series 22

MALE 90° PCB P/N 22-1400-xx

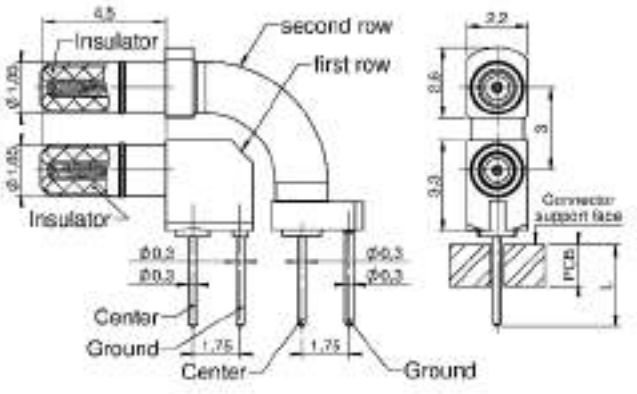

	Loaded		Loaded	Length L
First row	140012	it mounted in same connector	140002	3 mm
Second row	140022			
First row	140014	it mounted in same connector	140004	4,5 mm
Second row	140024			

PCB Lay-out

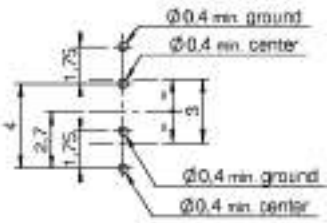

PCB LAYOUT 22-1400-xx

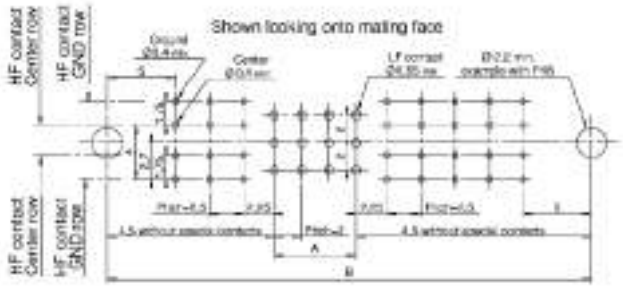

$$A = \left\{\frac{(nnx2)}{3}\right\} - 2$$

if yy or zz ≠ 0 :

$$B = \left\{\left(\frac{(yy)+(zz)}{2}\right)-2\right\} \times 2{,}5+14{,}5+A$$

if yy or zz = 0 :

$$B = \left\{\left(\frac{(yy)\text{or}(zz)}{2}\right)-1\right\} \times 2{,}5+11{,}75+A$$

B max. = 87

FEMALE 90° PCB P/N 22-2400-xx

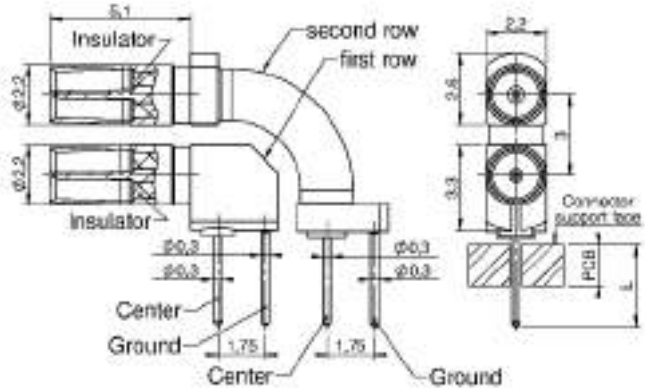

	Loaded		Loaded	Length L
First row	240012	it mounted in same connector	240002	3 mm
Second row	240022			
First row	240014	it mounted in same connector	240004	4,5 mm
Second row	240024			

PCB Lay-out

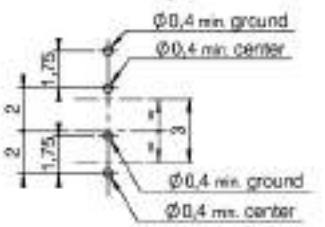

PCB LAYOUT 22-2400-xx

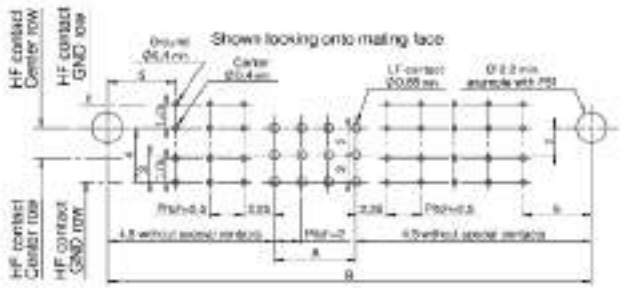

$$A = \left\{\frac{(nnx2)}{3}\right\} - 2$$

if yy and zz ≠ 0 :

$$B = \left\{\left(\frac{(yy)+(zz)}{2}\right)-2\right\} \times 2{,}5+14{,}5+A$$

if yy or zz = 0 :

$$B = \left\{\left(\frac{(yy)\text{or}(zz)}{2}\right)-1\right\} \times 2{,}5+11{,}75+A$$

B max. = 87

HF : High Frequency contacts series 22

MALE STRAIGHT TO CRIMP ON CABLE Ø 1.2 P/N 22-1312-ZS-xx

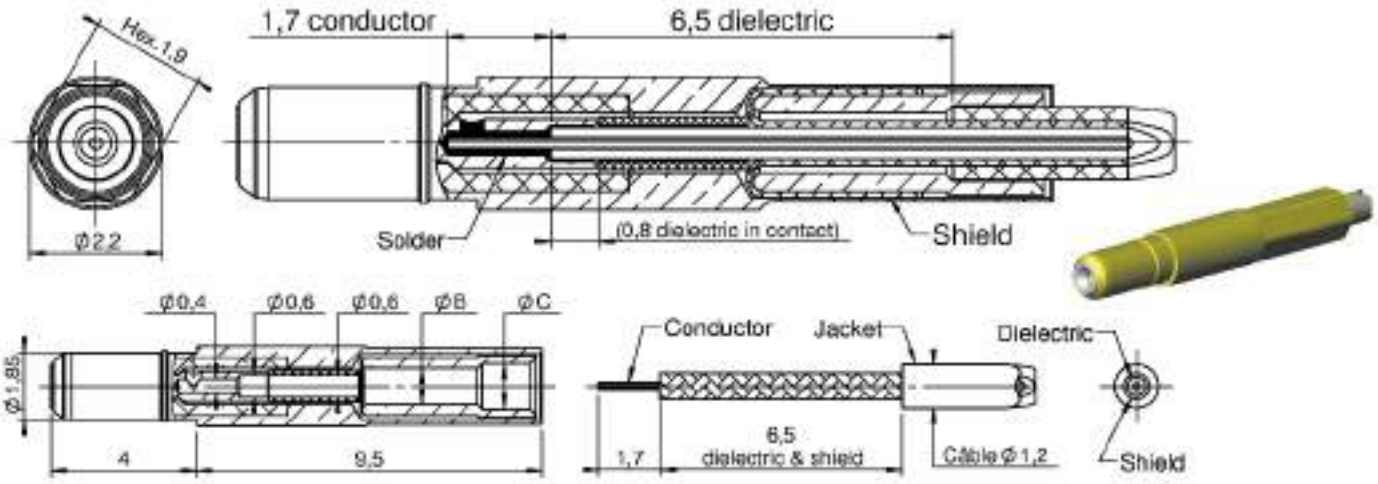

Cable assy instruction IC22HF01 on page 116

Loaded	Unloaded	ØB	ØC	
1312ZS01	22-1312-ZS-01	1 mm	1,25 mm	For cable type NEXANS 50VMTX
1312ZS02	22-1312-ZS-02	0,85 mm	1,15 mm	For cable type AXON SM50

FEMALE STRAIGHT TO CRIMP ON CABLE Ø 1.2 P/N 22-2312-ZS-xx

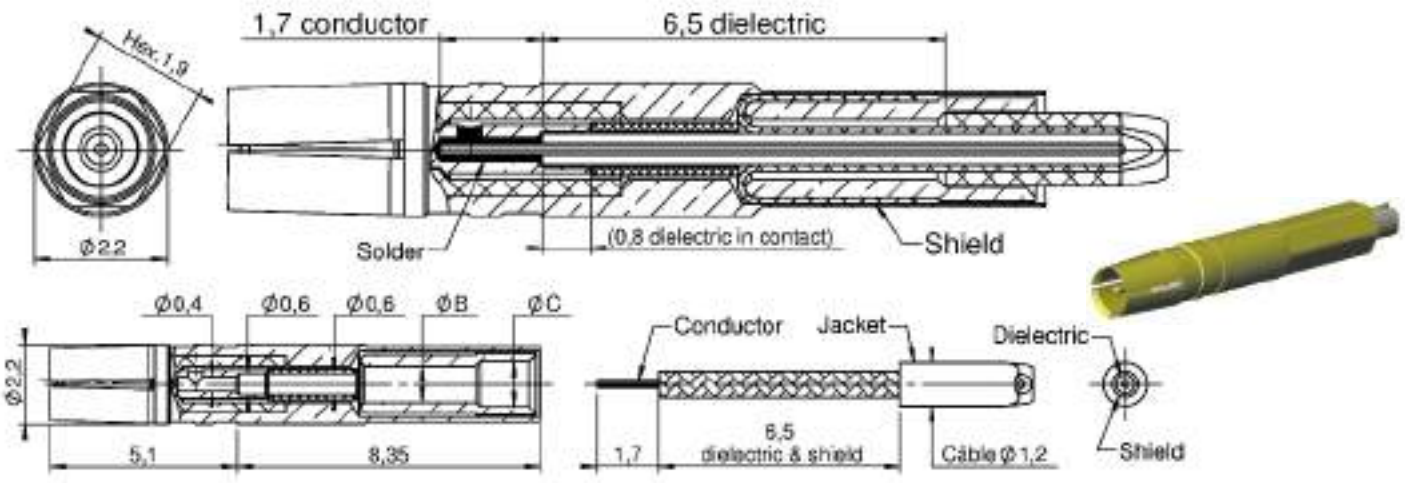

Cable assy instruction IC22HF02 on page 117

Loaded	Unloaded	ØB	ØC	
2312ZS01	22-2312-ZS-01	1 mm	1,25 mm	For cable type NEXANS 50VMTX
2312ZS02	22-2312-ZS-02	0,85 mm	1,15 mm	For cable type AXON SM50

HF : High Frequency contacts series 22

MALE STRAIGHT ON CABLE P/N 22-1320-ZZ

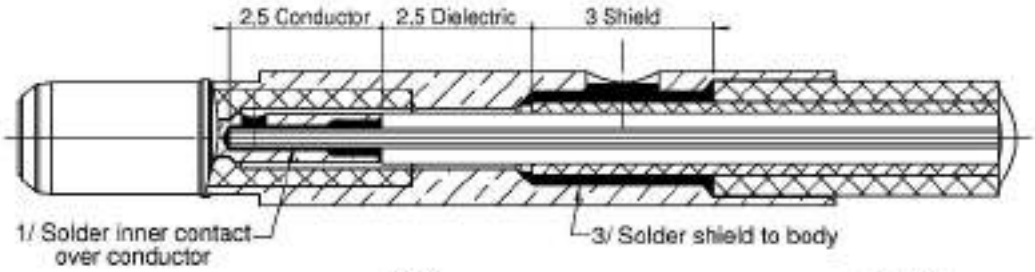

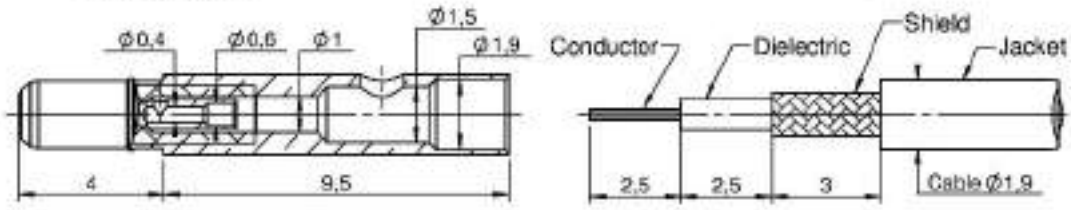

1/ Solder inner contact over conductor.
2/ Push cable with inner contact in body.
3/ Solder shield to body.

Loaded	Unloaded
1320ZZ	22-1320-ZZ

FEMALE STRAIGHT ON CABLE P/N 22-2320-ZZ

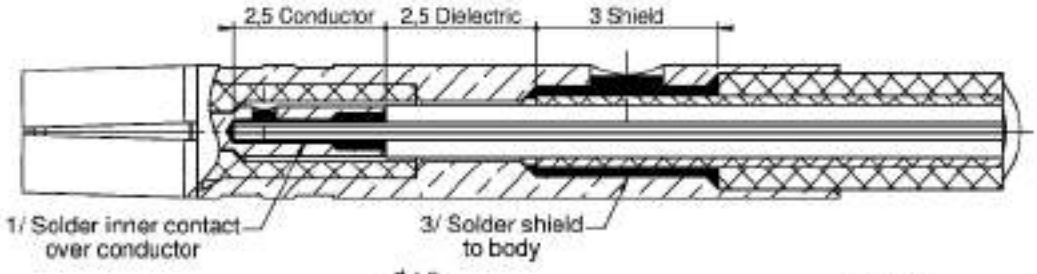

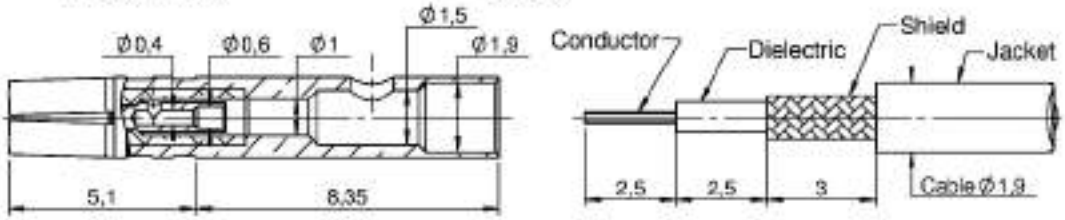

1/ Solder inner contact over conductor.
2/ Push cable with inner contact in body.
3/ Solder shield to body.

Loaded	Unloaded
2320ZZ	22-2320-ZZ

HP : High power contacts series 22

MALE STRAIGHT ON PCB P/N 22-3300-xx

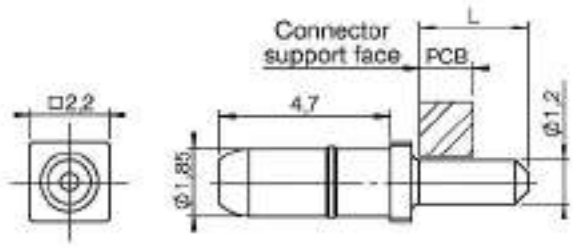

Loaded	Length L
330012	3 mm
330014	4,5 mm

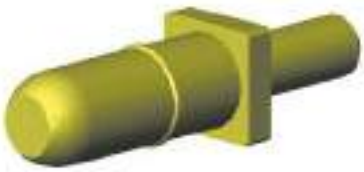

PCB Lay-out

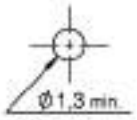

FEMALE STRAIGHT ON PCB P/N 22-4300-xx

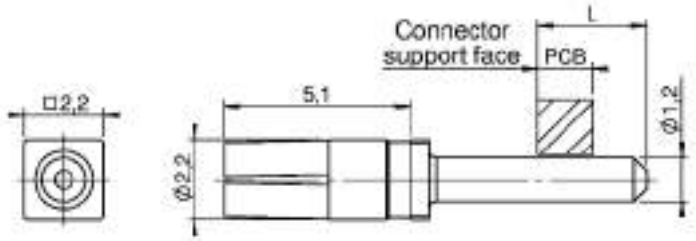

Loaded	Length L
430012	3 mm
430014	4,5 mm

PCB Lay-out

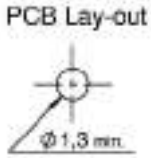

PCB LAYOUT 22-3300-xx & 22-4300-xx

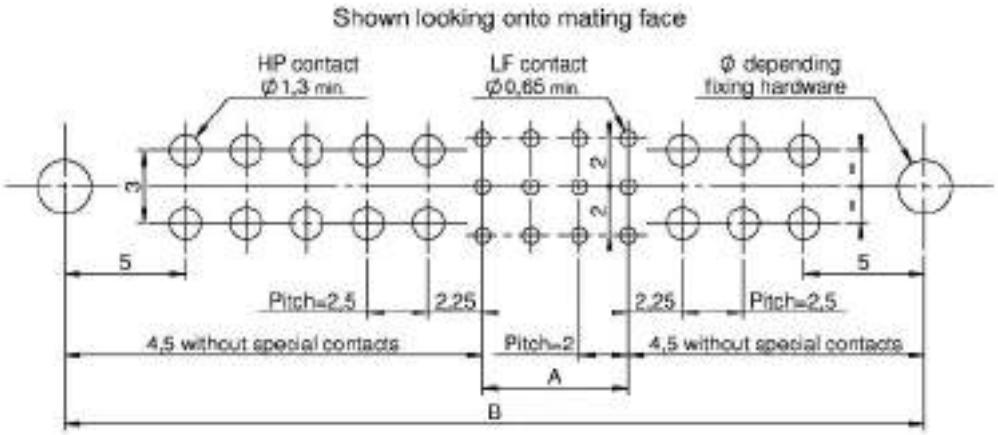

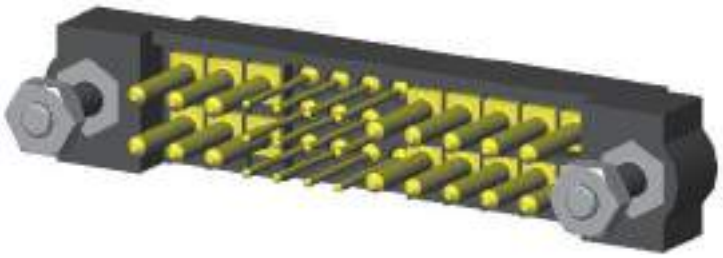

$$A = \left\{\frac{(nnx2)}{3}\right\} - 2$$

if yy and zz ≠ 0 :

$$B = \left\{\left(\frac{(yy)+(zz)}{2}\right) - 2\right\} \times 2{,}5 + 14{,}5 + A$$

if yy or zz = 0 :

$$B = \left\{\left(\frac{(yy)\text{ or }(zz)}{2}\right) - 1\right\} \times 2{,}5 + 11{,}75 + A$$

B max. = 87

HP : High power contacts series 22

MALE 90° PCB P/N 22-3400-xx

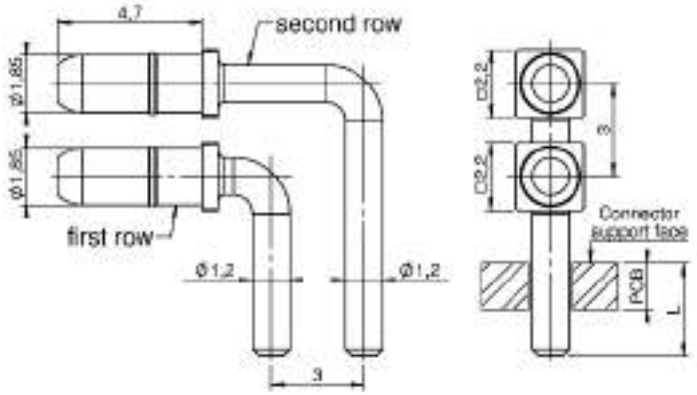

	Loaded		Loaded	Length L
First row	340012	it mounted in same connector	340002	3 mm
Second row	340022			
First row	340014	it mounted in same connector	340004	4,5 mm
Second row	340024			

PCB Lay-out

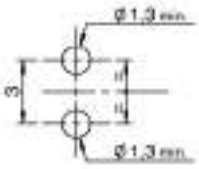

FEMALE 90° PCB P/N 22-4400-xx

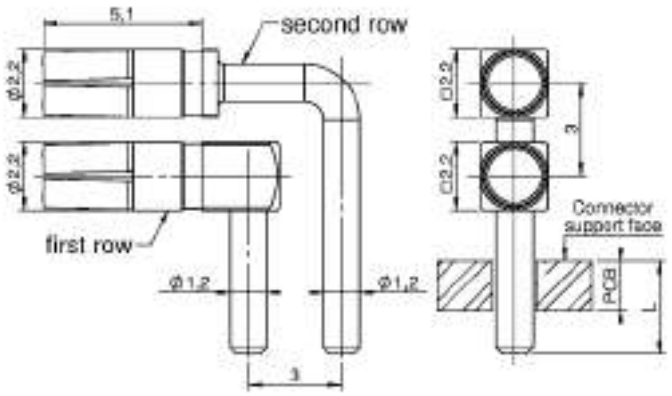

	Loaded		Loaded	Length L
First row	440012	it mounted in same connector	440002	3 mm
Second row	440022			
First row	440014	it mounted in same connector	440004	4,5 mm
Second row	440024			

PCB Lay-out

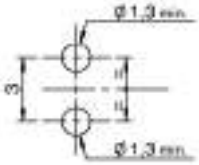

PCB LAYOUT 22-3400-xx & 22-4400-xx

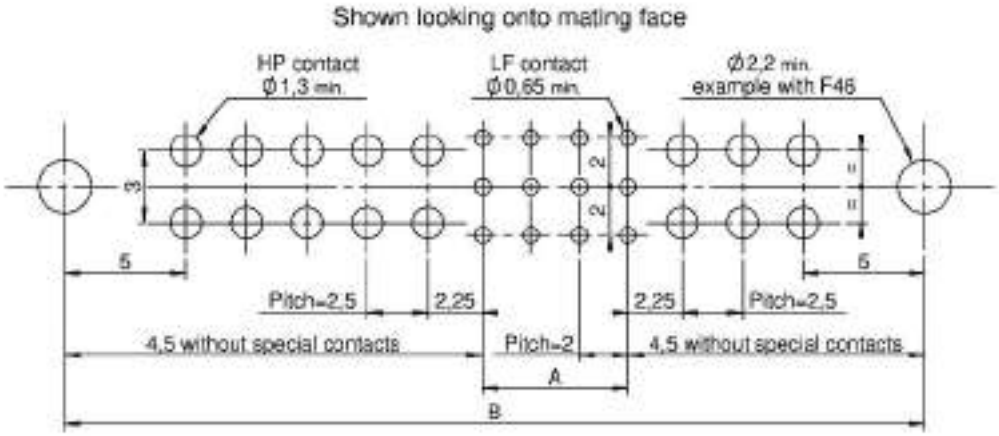

$A = \left\{\frac{(nnx2)}{3}\right\} - 2$

if yy and zz ≠ 0 :

$B = \left\{\left(\frac{(yy)+(zz)}{2}\right) - 2\right\} \times 2{,}5 + 14{,}5 + A$

if yy or zz = 0 :

$B = \left\{\left(\frac{(yy)_{or}(zz)}{2}\right) - 1\right\} \times 2{,}5 + 11{,}75 + A$

B max. = 87

HP : High power contacts series 22

MALE STRAIGHT ON CABLE P/N 22-33XX (solder & crimp)

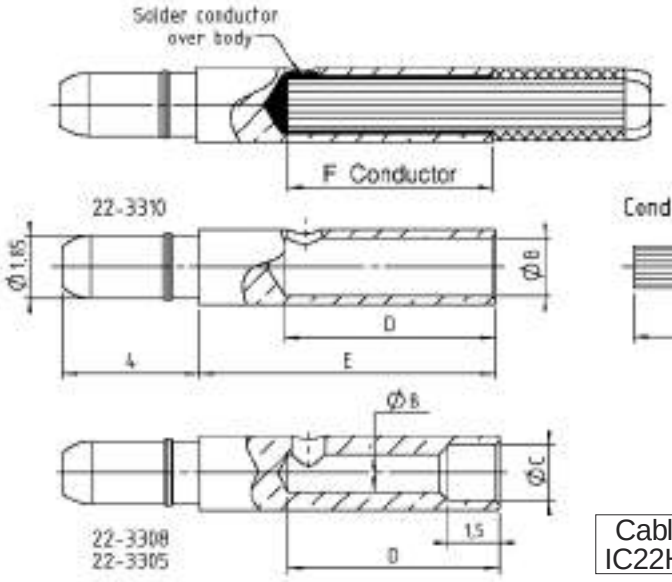

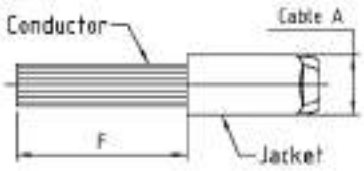

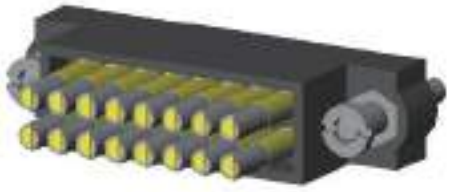

Cable assy instruction
IC22HP02 on page 121

Loaded	Unloaded	Ampere	Cable A			ØB	ØC	Length D hole	Length E body	Length F conductor	Solder	Crimpby HX3 Hexagone size/Dies	Crimp by AF8
			AWG 20	AWG 18	AWG 16								
3305	22-3305	5A	X			1,1 mm	1,65 mm	6,2 mm	8,8 mm	4,5 mm	OK	Hex. 1,9 mm/C14923	OK
3308	22-3308	8A		X		1,35 mm	1,85 mm	6,2 mm	8,8 mm	4,5 mm	OK	Hex. 1,9 mm/C14923	OK
3310	22-3310	10A	X	X	X	1,7 mm		6,2 mm	8,8 mm	6 mm	OK	Hex. 1,9 mm/C14923*	OK

* only for AWG 16

FEMALE STRAIGHT ON CABLE P/N 22-43XX (solder & crimp)

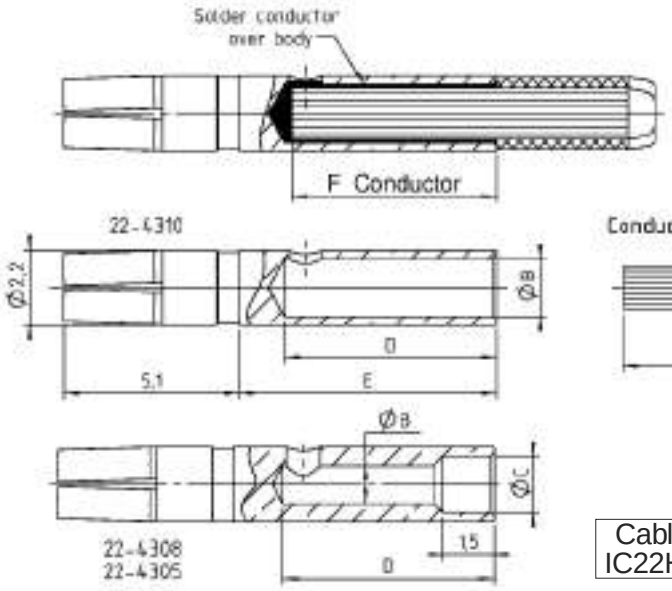

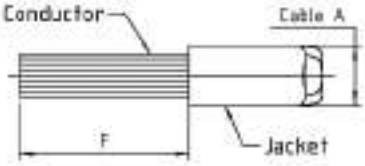

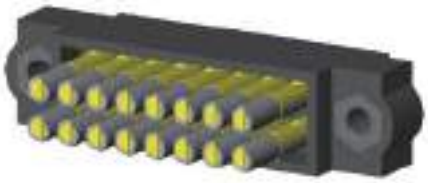

Cable assy instruction
IC22HP02 on page 121

Loaded	Unloaded	Ampere	Cable A			ØB	ØC	Length D hole	Length E body	Length F conductor	Solder	Crimpby HX3 Hexagone size/Dies	Crimp by AF8
			AWG 20	AWG 18	AWG 16								
4305	22-4305	5A	X			1,1 mm	1,65 mm	6,2 mm	7,7 mm	4,5 mm	OK	Hex. 1,9 mm/C14923	OK
4308	22-4308	8A		X		1,35 mm	1,85 mm	6,2 mm	7,7 mm	4,5 mm	OK	Hex. 1,9 mm/C14923	OK
4310	22-4310	10A	X	X	X	1,7 mm		6,2 mm	7,7 mm	6 mm	OK	Hex. 1,9 mm/C14923*	OK

* only for AWG 16

Tools

DANIELS MH800 TOOL AND POSITIONER P/N K1131 & K1692

Tools reference	Barrel
DANIELS MH800 only	MH800
Positioner K1692 only	C12929
Positioner K1131 only	K1131
DANIELS MH800 & K1131	C12237
DANIELS MH800 & K1692	C14925

Crimp barrel accomodation for LF contacts					
Hand crimp tool reference	Positioner	Contacts type	Contacts reference	Wire size (AWG)	Crimp tool setting
DANIELS MH800	K1692	Male C	12960	22	6
DANIELS MH800	K1692	Male S	12969	24	7
DANIELS MH800	K1692	Male S	12969	26 & 28	6
DANIELS MH800	K1692	Female C	C13064-P	22	6
DANIELS MH800	K1692	Female S	C12468	24	7
DANIELS MH800	K1692	Female S	C12468	26 & 28	6

Crimp barrel accomodation for central contact HF30 series			
Hand crimp tool reference	Positioner	Conductor	Crimp tool setting
DANIELS MH800	K1131	Ø 0,30	2 & 3
DANIELS MH800	K1131	Ø 0,50	3 & 4

DANIELS AF8 TOOL P/N 16459

Tools reference	Reference Nicomatic
DANIELS AF8 only	16459
DANIELS AF8 + C16460	C16462
DANIELS AF8 + C16461	C16463

Crimp barrel accomodation for crimping HP contact		
Hand crimp tool reference	Positioner	HP contact serie
DANIELS AF8	C16460	30
DANIELS AF8	C16461	22

Tools

DANIELS HX3 TOOL P/N 13858

Tools reference	Reference Nicomatic
DANIELS HX3 only	13858
DANIELS HX3 & C13847	C12238
DANIELS HX3 & C14680	C14770

Crimp barrel accomodation for crimping coaxial contact shield		
Hand crimp tool reference	Dies	Hexagonal imprint
DANIELS HX3	C13847	Hex. 1,9 / Hex. 2,4 / Hex. 2,8
DANIELS HX3	C14680	Hex. 3,25 / Hex. 4

CRIMP DIE C13847 FOR DANIELS HX3 TOOL (HF CONTACT)

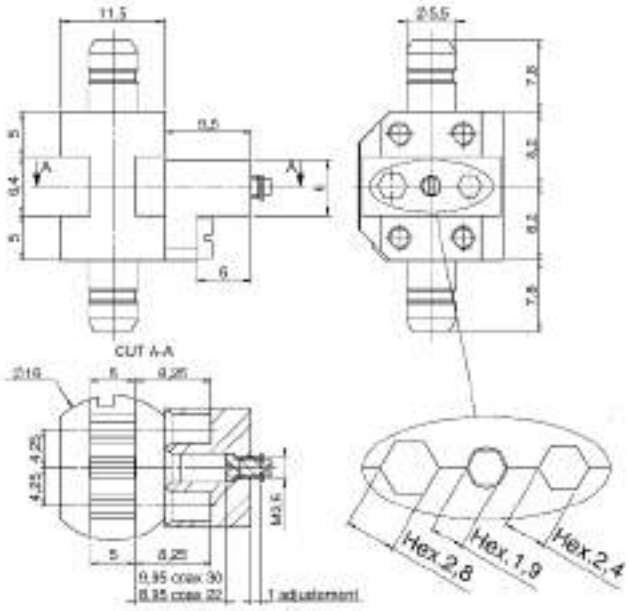

CRIMP DIE C14680 FOR DANIELS HX3 TOOL (HF CONTACT)

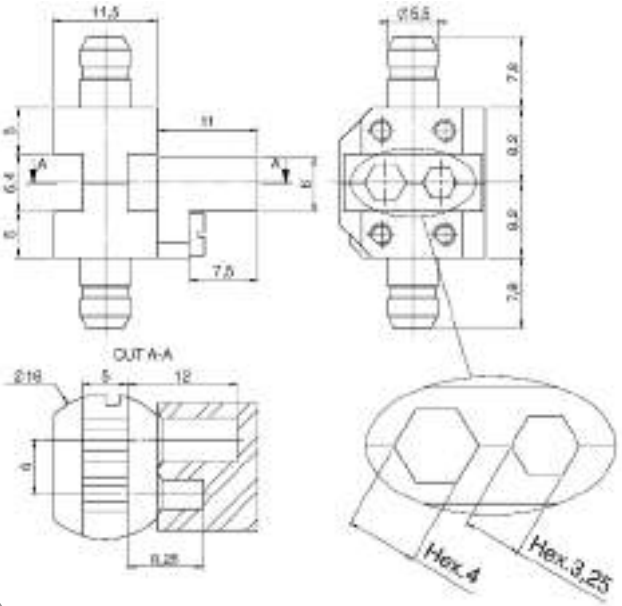

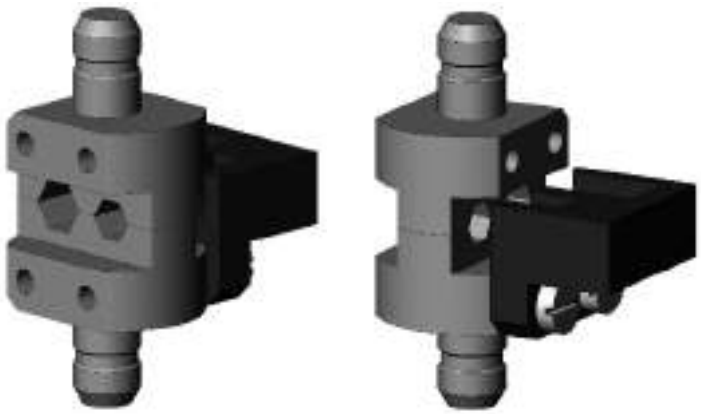

Tools

LF CONTACTS INSERTION & WITHDRAWAL TOOL P/N C12935

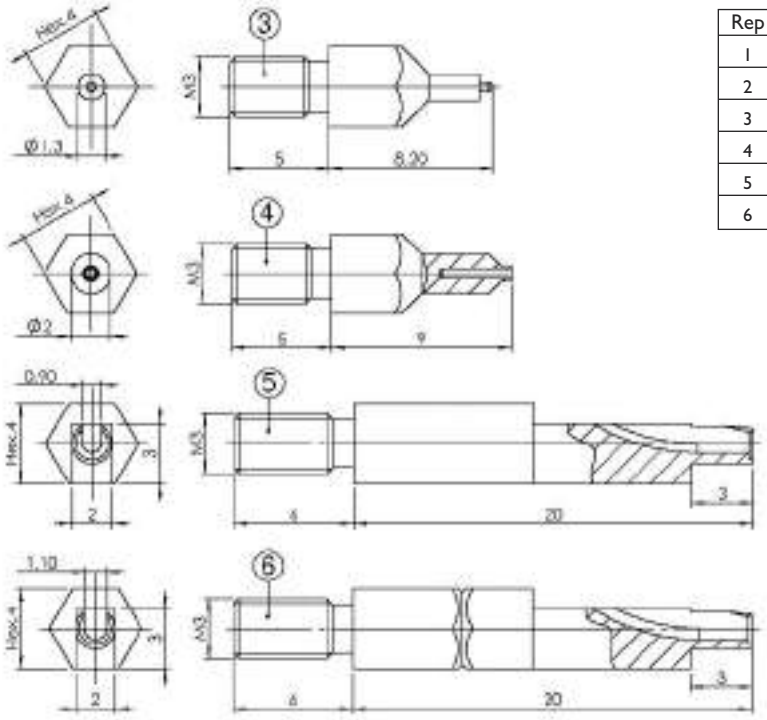

Rep	Reference	Assembly C12935
1	13241	Body
2	13240	Plug
3	13170	Female contact extraction tip
4	13242	Male contact extraction tip
5	13171	24-28 AWG insertion tip
6	13712	22 AWG insertion tip

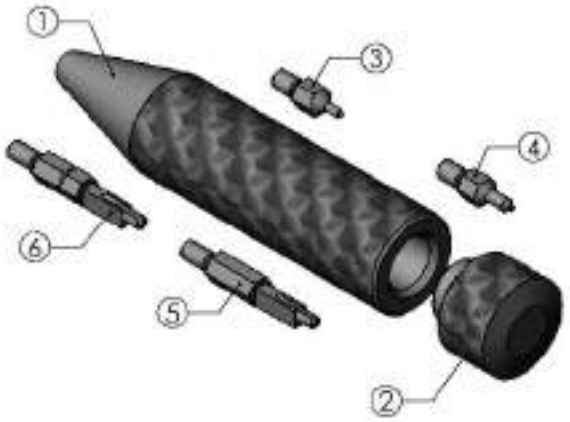

HF / HP SERIES 22 CONTACTS REMOVAL P/N C13997

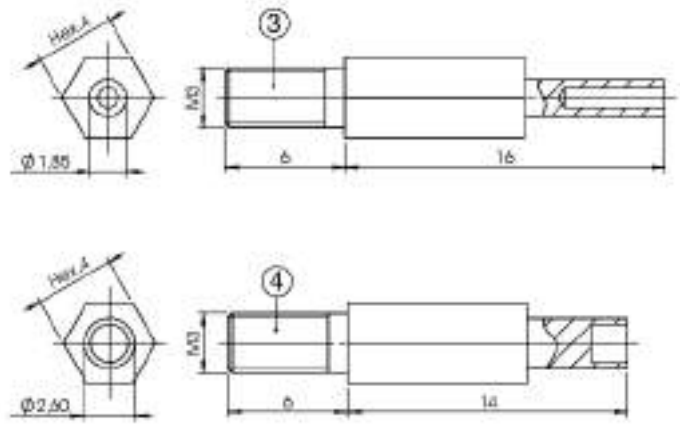

Rep	Reference	Assembly C13997
1	13241	Body
2	13240	Plug
3	13995	Female contact extraction tip
4	13996	Male contact extraction tip
5	16139	Male & female contact insertion tool

HF / HP SERIES 30 CONTACTS REMOVAL P/N 12368

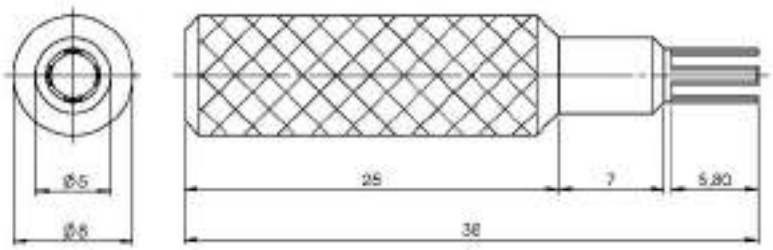

Tools

LATCH SEPARATION TOOL P/N C14790

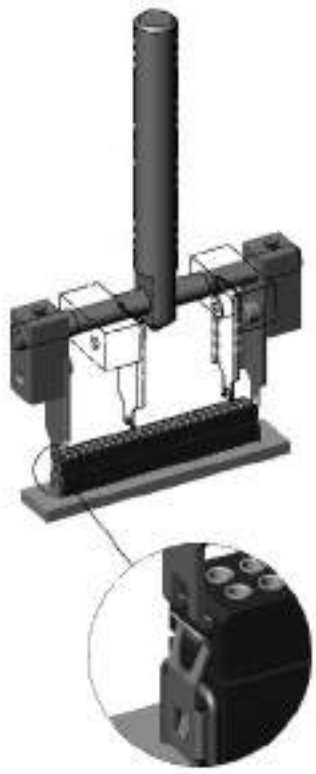

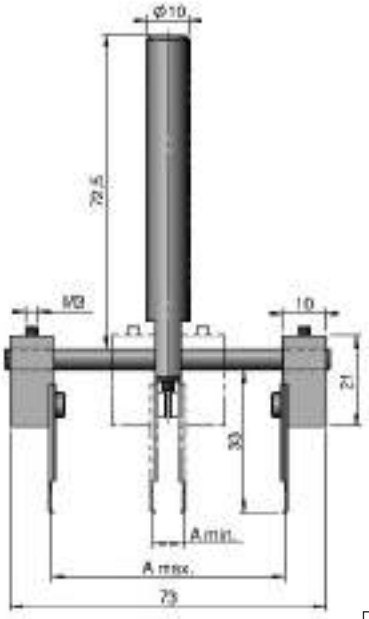

Series	A max.		A min.	
	A max.	LF contacts	A min.	LF contacts
CMM 100	53	25	7	2
CMM 200	53	50	7	4

SCREWDRIVER P/N C14743 FOR NUT P/N 12685

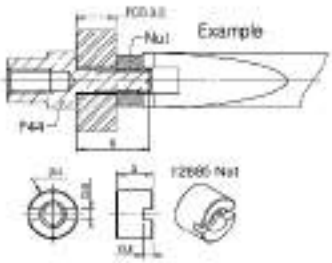

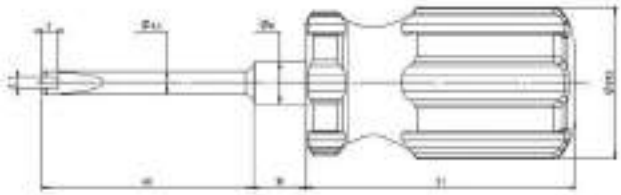

Optional: dynamometric screwdriver specifically designed for low torques (includes bits & adjusting key).

MOUNTING OF C14772 BACK CAPS

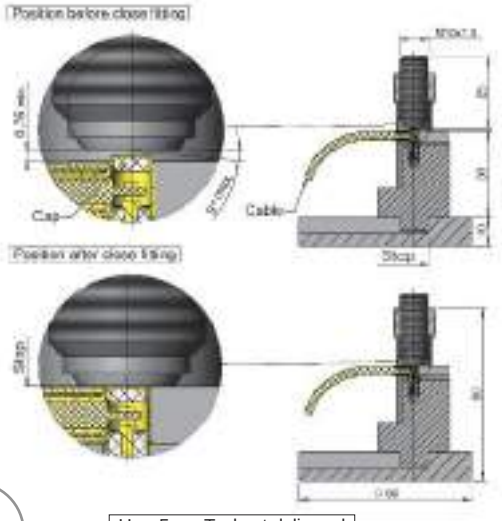

Hex. 5mm Tool not delivered

SUCOFLEX SOLDER TOOL P/N C14777

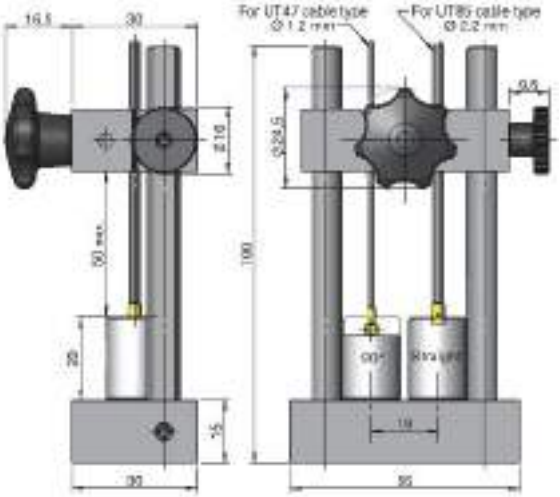

Accessories

STRAIGHT COVER FOR CMM SERIES 220 (male & female)
P/N CMM-C2-XX (other upon request)

Material : high temp. thermoplastic (-55°C to +200°C)

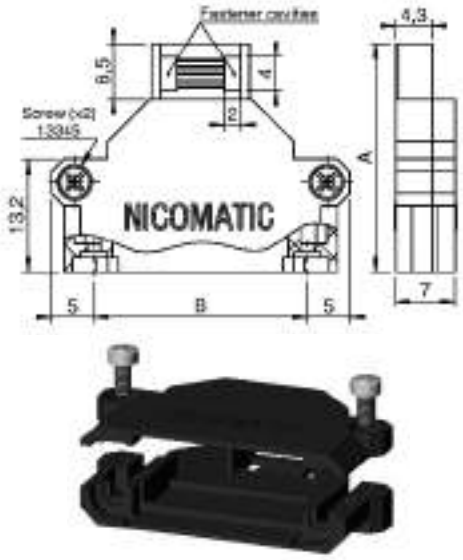

Length B in mm
(distance between fixing hardware axies)

CMM-C2-__

CMM 220 series

Reference	Length B	Length A	Screw (x2)
CMM-C2-11	11 mm	23,7 mm	included
CMM-C2-15	15 mm	23,7 mm	
CMM-C2-17	17 mm	17,2 mm	
CMM-C2-25	25 mm	26,7 mm	
CMM-C2-27	27 mm	26,7 mm	
CMM-C2-31	31 mm	29,7 mm	
CMM-C2-39	39 mm	29,7 mm	
CMM-C2-45	45 mm	33,7 mm	
CMM-C2-47	47 mm	33,7 mm	
CMM-C2-49	49 mm	33,7 mm	
CMM-C2-53	53 mm	33,7 mm	
CMM-C2-55	55 mm	33,7 mm	

Note: F28 and M18 fixings are not included with the cover

45° COVER FOR CMM SERIES 220 (male & female)
P/N CMM-C2-XX-45 (upon request)

Material : high temp. thermoplastic (-55°C to +200°C)

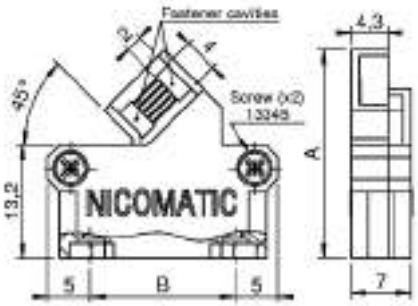

Length B in mm
(distance between fixing hardware axies)

CMM-C2-__-45

CMM 220 series

45 for exit 45°

Reference	Length B	Length A	Screw (x2)
CMM-C2-17-45	17 mm	24,4 mm	Included

CMM220 male F28 fixing not included with cover
CMM220 female M18 fixing not included with cover

90° COVER FOR CMM SERIES 220 (male & female)
P/N CMM-C2-XX-90 (upon request)

Material : high temp. thermoplastic (-55°C to +200°C)

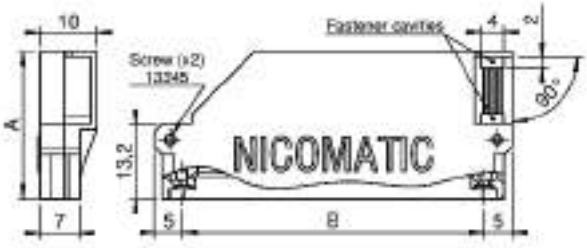

Reference	Length B	Length A	Screw (x2)
CMM-C2-53-90	53 mm	26 mm	Included

CMM220 male F28 fixing not included with cover
CMM220 female M18 fixing not included with cover

Length B in mm
(distance between fixing hardware axies)

CMM-C2-__-90

CMM 220 series

90 for exit 90°

Note: Aluminum covers are available upon request. Contact us.

Accessories

COVERS STRAIGHT FOR CMM SERIES 320 & 340 (male & female)
P/N CMM-C3-XX.X

Material : high temp. thermoplastic (-55°C to +200°C)

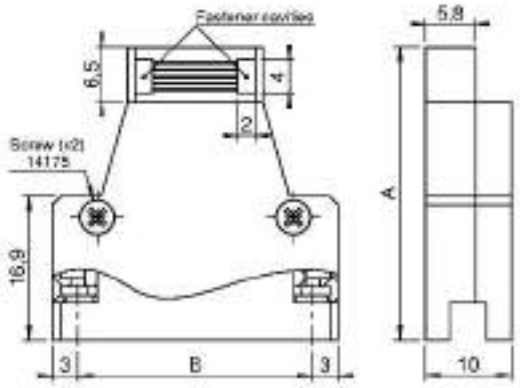

Reference	Length B	Length A	Screw (x2)
CMM-C3-27.5	27,5 mm	34,4 mm	Included
CMM-C3-45.0	45,0 mm	34,4 mm	

For CMM320/340 male & female
M45 or F57 fixing not included with cover

Other upon request

Length B in mm
(distance between fixing hardware axies)

CMM-C3-.. .

CMM series 320 & 340

SHIELDING FOR CMM SERIES 220 (male straight on PCB)
P/N 12997-XX (upon request)

XX = distance between fixing axis B

SHIELDING FOR CMM SERIES 220 (male 90° on PCB)
P/N 12998-XX (upon request)

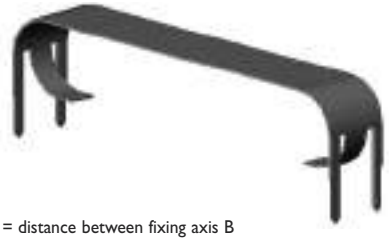

XX = distance between fixing axis B

SHIELDING FOR CMM SERIES 220 (female on cable)
P/N C13024-XX (upon request)

XX = distance between fixing axis B

Accessories

BACKPOTTING SHAPE FOR CMM SERIES 200 (female) P/N 14501-XX

Material : thermoplastic 100°C max.

Reference	Length B
14501-07	min. 7 mm
14501-09	9 mm
14501-11	11 mm
14501-13	13 mm
14501-15	15 mm
14501-17	17 mm
14501-19	19 mm
14501-21	21 mm
14501-23	23 mm
14501-25	25 mm
14501-27	27 mm
14501-29	29 mm
14501-31	31 mm
14501-33	33 mm
14501-35	35 mm
14501-37	37 mm
14501-39	39 mm
14501-41	41 mm
14501-43	43 mm
14501-45	45 mm
14501-47	47 mm
14501-49	49 mm
14501-51	51 mm
14501-53	max. 53 mm

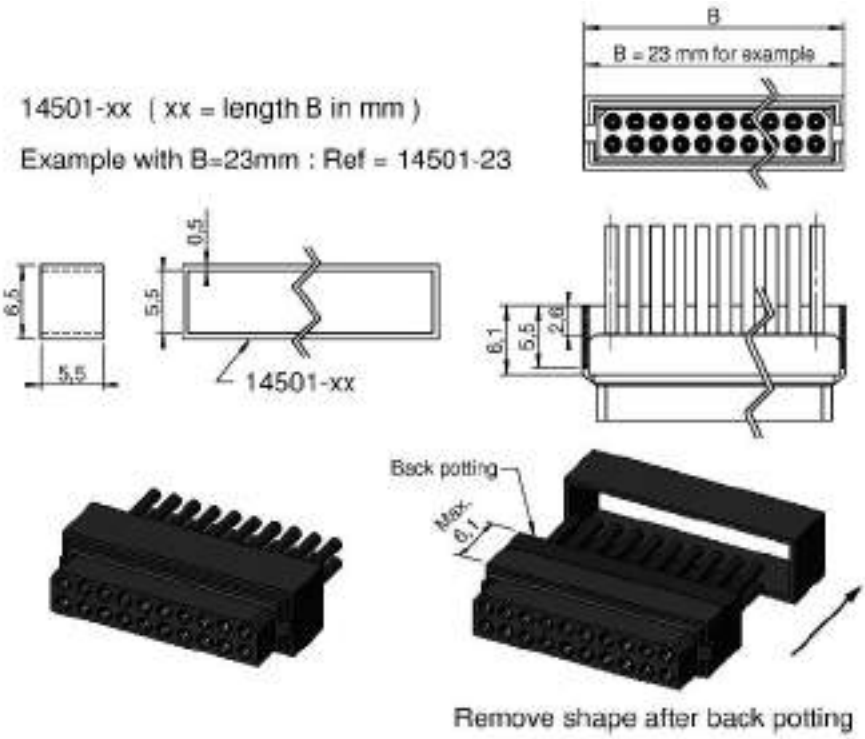

BACKPOTTING SHAPE FOR CMM SERIES 220 (male & female) P/N 14143-XX

Material : thermoplastic 100°C max.

Reference	Length B
14143-09	min. 9 mm
14143-11	11 mm
14143-13	13 mm
14143-15	15 mm
14143-17	17 mm
14143-19	19 mm
14143-21	21 mm
14143-23	23 mm
14143-25	25 mm
14143-27	27 mm
14143-29	29 mm
14143-31	31 mm
14143-33	33 mm
14143-35	35 mm
14143-37	37 mm
14143-39	39 mm
14143-41	41 mm
14143-43	43 mm
14143-45	45 mm
14143-47	47 mm
14143-49	49 mm
14143-51	51 mm
14143-53	53 mm
14143-55	55 mm
14143-57	57 mm
14143-59	59 mm
14143-61	61 mm
14143-63	63 mm
14143-65	max. 65 mm

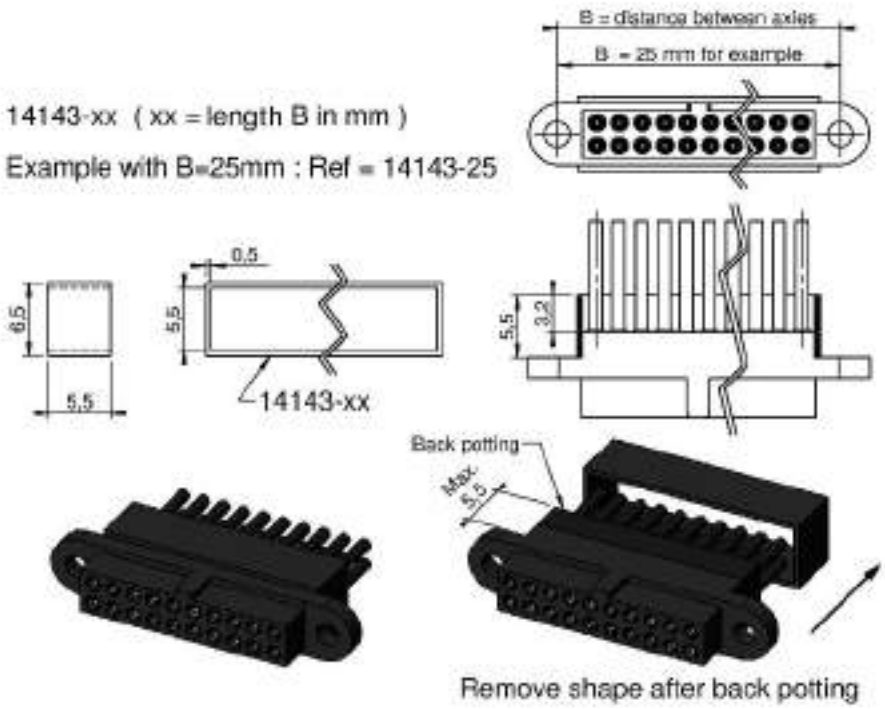

Note: Special housing with integrated backpotting available upon request.

Accessories

CONTACTS ALIGNMENT PLATE P/N 14601-120

Material : high temperature thermoplastic (-55°C to +200°C)

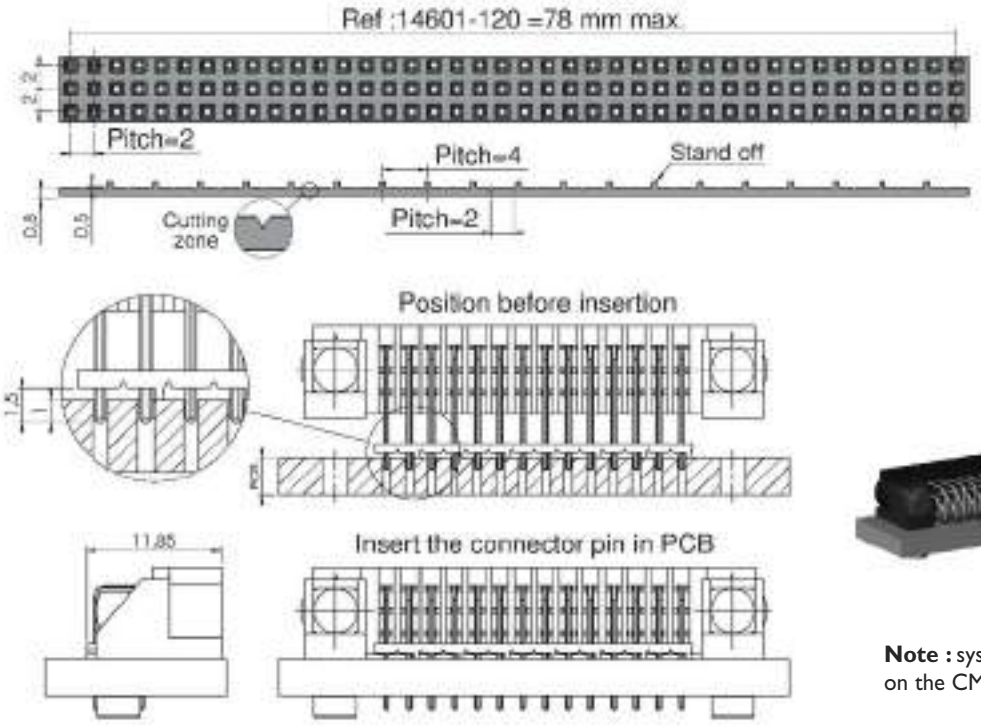

Divisible

Note : systematically delivered and mounted on the CMM 320 series "right angle" (V and VL types)

SILICON INTERFACIAL SEAL (for male connector except S-C types)

LF 220 series P/N 14599-54 = 52 mm max.

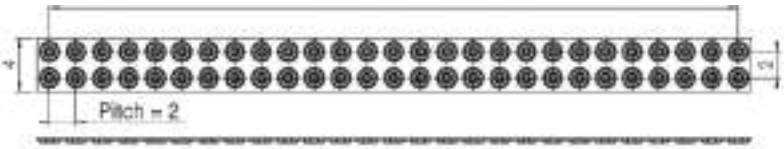

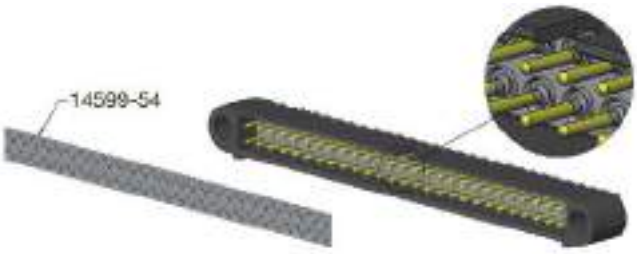

LF 320 series P/N 14980-120 = 78 mm max.

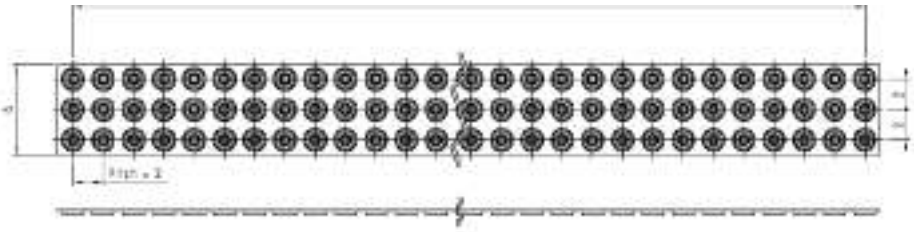

Special contacts 220 series P/N 16053-15 = 60,2 mm max.

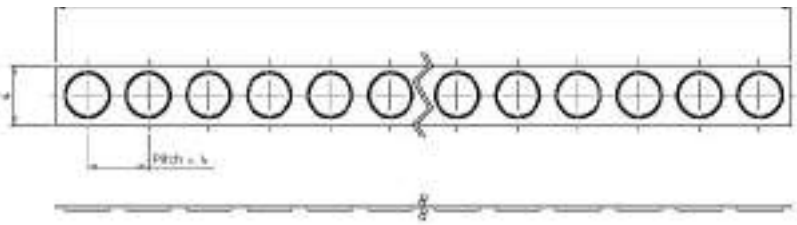

Mix-layout on request

Accessories

COAX CABLE CRIMP TERMINATION
(straight for cables Ø 2 and Ø 2,7)

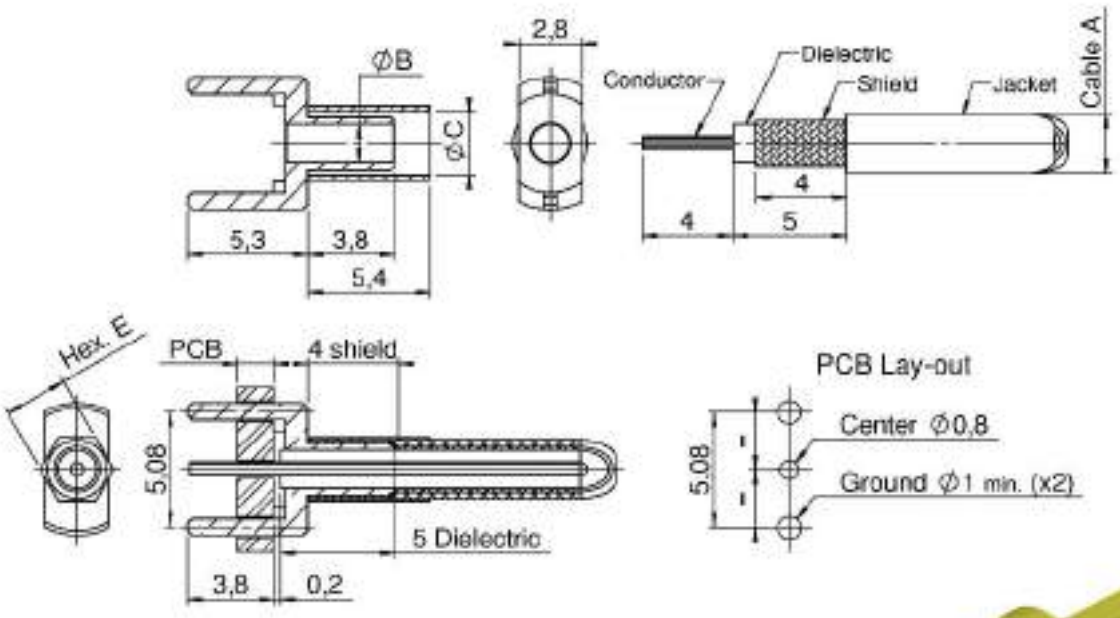

	C14759	C14760
Cable A	Ø 2	Ø 2,7
Ø B	1 mm	1,7 mm
Ø C	2,2 mm	2,8 mm
Hex. E	2,4 on flat	2,8 on flat

COAX CABLE CRIMP TERMINATION
(90° for cables Ø 2 and Ø 2,7)

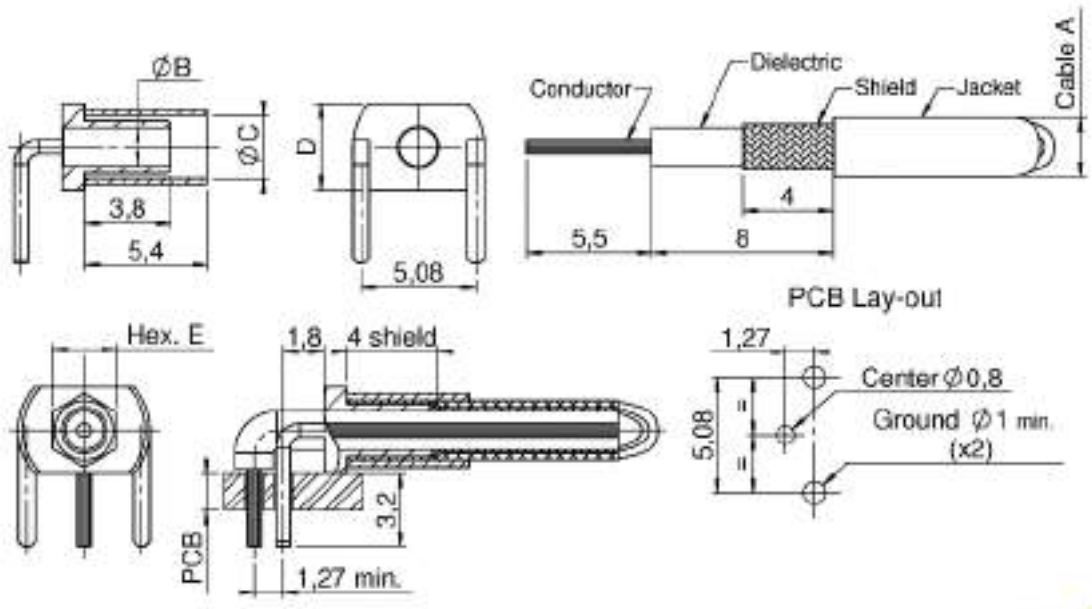

	C14761	C14762
Cable A	Ø 2	Ø 2,7
Ø B	1 mm	1,7 mm
Ø C	2,2 mm	2,8 mm
Length D	3,4 mm	3,8 mm
Hex. E	2,4 on flat	2,8 on flat

Accessories

COAX CABLE CRIMP TERMINATION

P/N C13313 for RG 178 and P/N C14765 for RG 178 DS

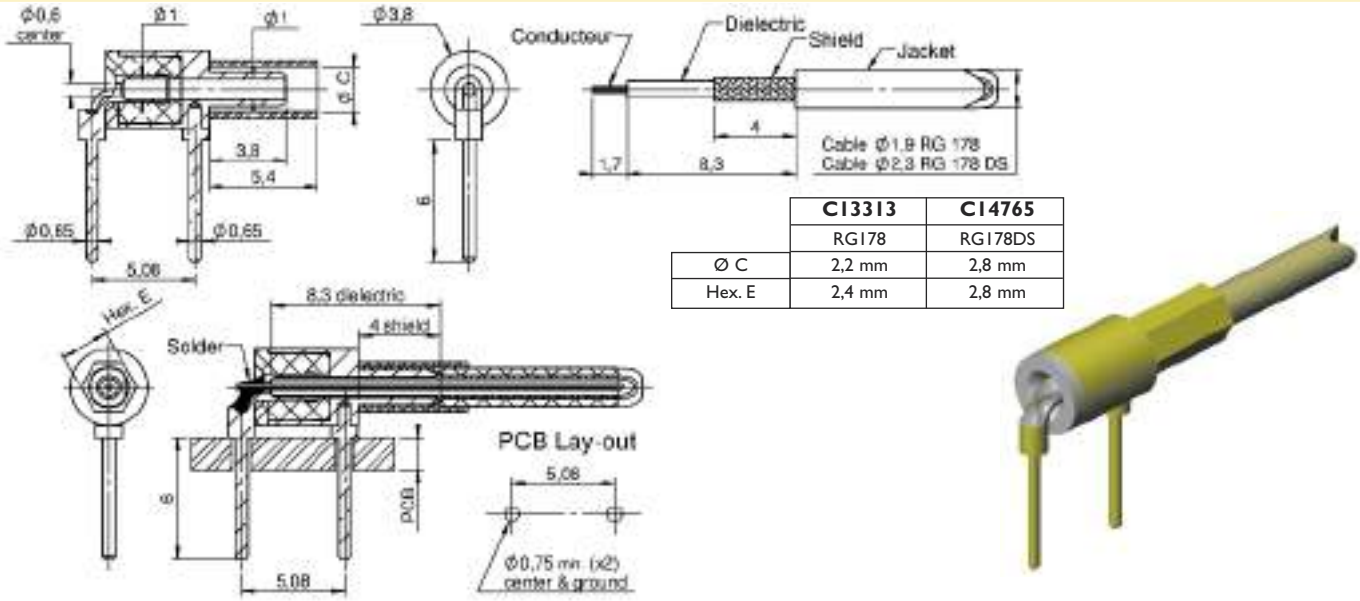

	C13313	C14765
	RG178	RG178DS
Ø C	2,2 mm	2,8 mm
Hex. E	2,4 mm	2,8 mm

COAX CABLE CRIMP TERMINATION

P/N C12780 for cables RG 316

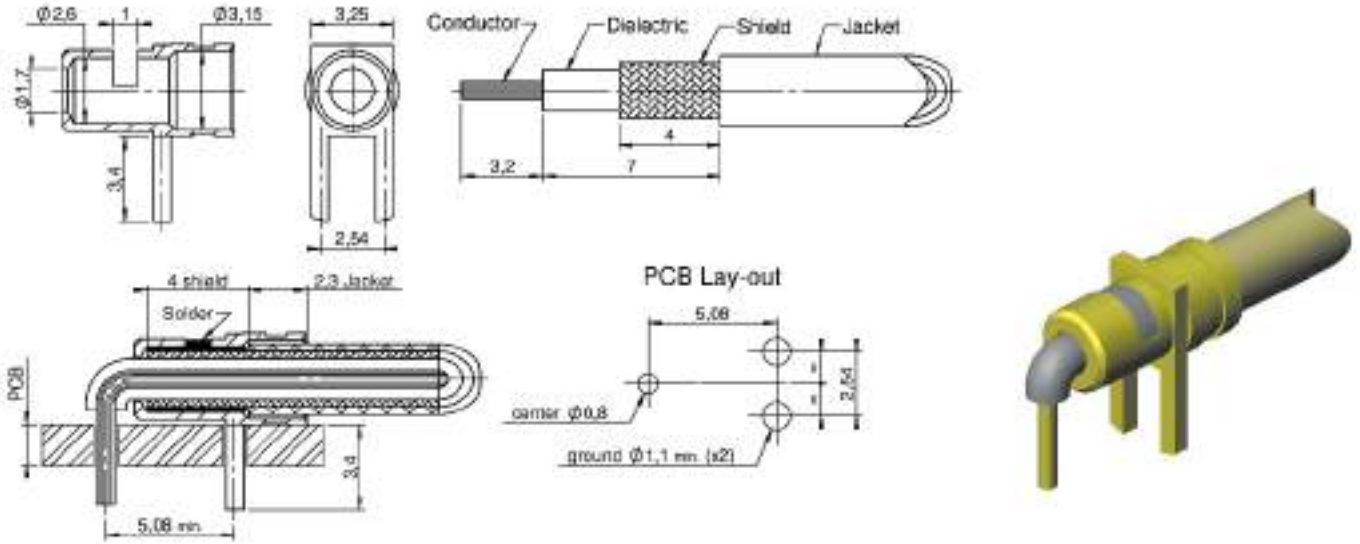

CRIMP GAUGE REDUCER

for awg 30-32 for LF contacts P/N 12922 & 14142

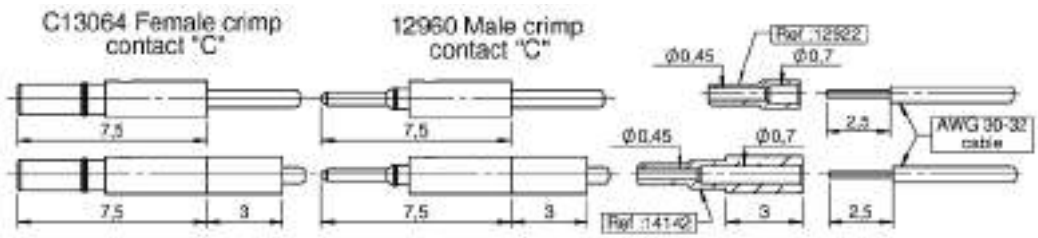

Gender	Contact "C"	Reducer	Tool	Positioner	Position 1st crimp	Position 2nd crimp
Male Female	12960 C13064-P	12922	MH800	K1692	Contact + reducer + cable position "4"	
Male Female	12960 C13064-P	14142	MH800	K1692	Reducer + cable position "8"	(Reducer & cable) + contact position "4"

Cable instructions (ICLF01)

Diameter X	
Reference	X
12969	0.7
16035	
C12468	
C16026	
12960	0.9
C13064-P	

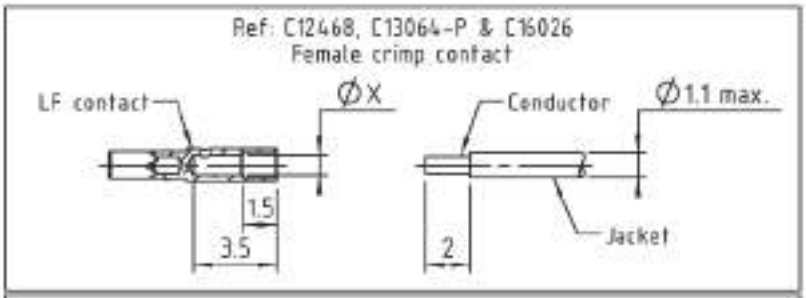

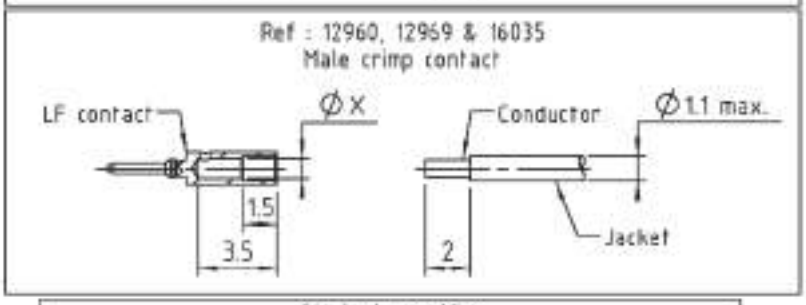

Crimp barrel accomodation					
Contact		Wire size	Tool		
Reference	Type	(AWG)	Hand crimp tool reference	Positioner	Crimp tool setting
12960	Male C	22	DAVEL'S M9000	K692	6
12969	Male S	24			7
16035					
12969	Male S	26 & 28			6
16035					
C13064-P	Female C	22			6
C12468	Female S	24			7
C16036					
C12468	Female S	26 & 28			6
C16026					

1 - Set the Hand crimp tool according to Crimp barrel accommodation table above
- 1.1 - Select the crimp tool setting with the selector knob.
- 1.2 - Put the Positioner K1692 in the positioner guide.

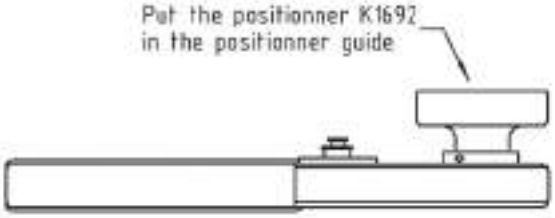

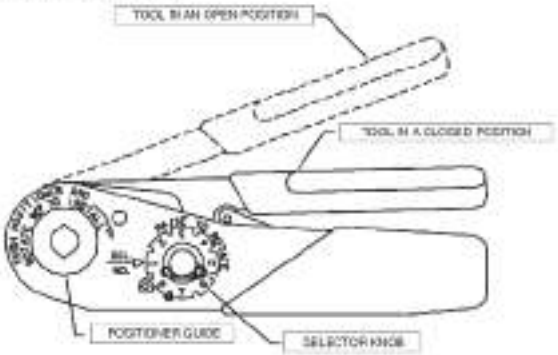

2 - Check the wire stripping
- 2.1 - Insert the Wire in the contact
- 2.2 - The conductor must be visible through the inspection window of the contact

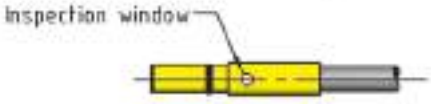

3 - Insert the contact and Wire assembly in the crimp guide of the hand crimp tool
- 3.1 - In the crimp guide, the contact and Wire assembly must be in the end stop position
- 3.2 - During the crimping, keep the wire in position
- 3.3 - Just one crimping operation is allowed per contact and wire assembly

4 - Visually check the crimping
- 4.1 - The crimping must not deform the inspection window
- 4.2 - The contact must not have visible fractures or cracks
- 4.3 - The contact barrel must not be deformed or bent

5 - Check the contact is firmly crimped, by pulling gently
- 5.1 - For that purpose two (2) fingers are enough : pinch the wire and pull smoothly along the axis of the crimped contact.

Cable instructions

				HF CONTACTS			CONNECTION MODE		
	Supplier	P/N	Ø Cable	Series	Gender	Ref. contact	Central contact	Shield	Impedance
SPECIAL	Nexans (Axon *)	50VMTX (SM 50 *)	1,2 mm	HF30	Male	30-1312-ZS-01	Solder	Crimped Hex. 1,9 mm	50 Ohm
						(30-1312-ZS-02 *)			
						30-1412-ZS			
					Female	30-2312-ZS-01			
						(30-2312-ZS-02 *)			
						30-2412-ZS			
				HF22	Male	22-1312-ZS-01			
						(22-1312-ZS-02 *)			
					Female	22-2312-ZS-01			
						(22-2312-ZS-02 *)			
		75VMTX (SM 75 *)	1,2 mm	HF30	Male	30-1312-ZS-75-01	Solder	Crimped Hex. 1,9 mm	75 Ohm
						(30-1312-ZS-75-02 *)			
						30-1412-ZS-75			
					Female	30-2312-ZS-75-01			
						(30-2312-ZS-75-02 *)			
						30-2412-ZS-75			
				HF22	Male	22-1312-ZS-75-01			
						(22-1312-ZS-75-02 *)			
					Female	22-2312-ZS-75-01			
						(22-2312-ZS-75-02 *)			
	Axon RG 178 DT	P500955	2,3 mm	HF30	Male	30-1320-DS	On choice	Crimped Hex. 2,8 mm	50 Ohm
						30-1420-DS	Solder		
					Female	30-2320-DS	On choice		
						30-2420-DS	Solder		
	Axon PTFE Cellular	P 812817	2,3 mm	HF30	Male	30-1324-DS	On choice	Crimped Hex. 2,8 mm	50 Ohm
						30-1424-DS	Solder		
					Female	30-2324-DS	On choice		
						30-2424-DS	Solder		
		P 804298 B	2,4 mm	HF30	Male	30-1324-DS-75	On choice	Crimped Hex. 2,8 mm	75 Ohm
						30-1424-DS-75	Solder		
					Female	30-2324-DS-75	On choice		
						30-2424-DS-75	Solder		
	Axon RG 316 DT	P0530912	2,7 mm	HF30	Male	30-1326-DS	On choice	Crimped Hex. 3,25 mm	50 Ohm
						30-1426-DS	Solder		
					Female	30-2326-DS	On choice		
						30-2426-DS	Solder		
	Axon RG 179 DT	P530268	3 mm	HF30	Male	30-1326-DS-75	On choice	Crimped Hex. 3,25 mm	75 Ohm
						30-1426-DS-75	Solder		
					Female	30-2326-DS-75	On choice		
						30-2426-DS-75	Solder		

DT = DS (Double Shield)

	ØB	ØC	Sleeve
P/N terminal -01 for 50VMTX cable type	1 mm	1,25 mm	
P/N terminal -02 for SM 50 cable type	0,85 mm	1,15 mm	

Cable instructions

Coax cable

Normes			HF contacts			Connection mode		
MIL-C-17	NF C93-550	Ø Cable	Series	Gender	Ref. contact	Central contact	Shield	Impedance
RG 178	KX 21 A	2 mm	HF30	Male	30-1320-SS	Crimped	Crimped Hex. 2,4 mm	50 Ohm
					30-1320-ZS	Solder		
					30-1420-ZS			
				Female	30-2320-SS	Crimped		
					30-2320-ZS	Solder		
					30-2420-ZS			
			HF22	Male	22-1320-ZZ		Solder	
				Female	22-2320-ZZ			
RG 316	KX 22 A	2,7 mm	HF30	Male	30-1326-SS	Crimped	Crimped Hex. 2,8 mm	50 Ohm
					30-1326-ZS	Solder		
					30-1426-ZS			
				Female	30-2326-SS	Crimped		
					30-2326-ZS	Solder		
					30-2426-ZS			
RG 174	KX 3 B	2,7 mm	HF30	Male	30-1326-SS	Crimped	Crimped Hex. 2,8 mm	50 Ohm
					30-1326-ZS	Solder		
					30-1426-ZS			
				Female	30-2326-SS	Crimped		
					30-2326-ZS	Solder		
					30-2426-ZS			
RG 179		2,7 mm	HF30	Male	30-1326-SS-75	Crimped	Crimped Hex. 2,8 mm	75 Ohm
					30-1326-ZS-75	Solder		
					30-1426-ZS-75			
				Female	30-2326-SS-75	Crimped		
					30-2326-ZS-75	Solder		
					30-2426-ZS-75			

Semi-rigid

			HF contacts			Connection mode		
Supplier	P/N	Ø Cable	Series	Gender	Ref. contact HF	Central contact	Shield	Impedance
	UT47	1,2 mm	HF30	Male	30-1347-ZZ	Solder	Solder	50 Ohm
					30-1447-ZZ			
				Female	30-2347-ZZ			
					30-2447-ZZ			
(Axon *)	UT85 (QFX 86 SPCW *)	2,2 mm	HF30	Male	30-1385-ZZ	Solder	Solder	50 Ohm
					30-1485-ZZ			
				Female	30-2385-ZZ			
					30-2485-ZZ			

Cable instructions (IC22HF01)

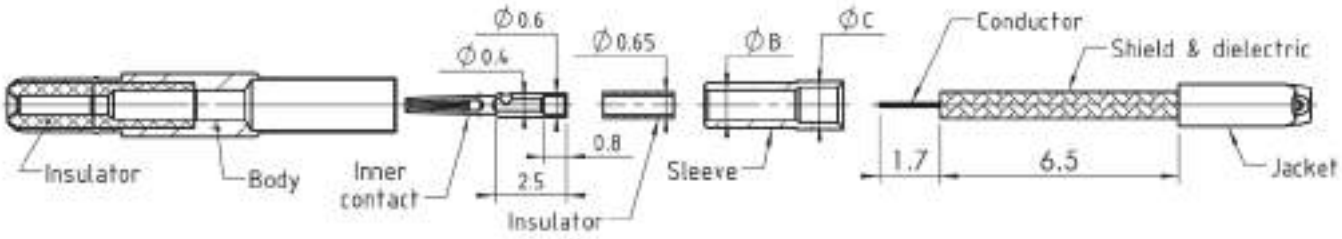

1/ 1.1 - Thread the sleeve until stop onto the cable.
1.2 - Place the shield on the sleeve.

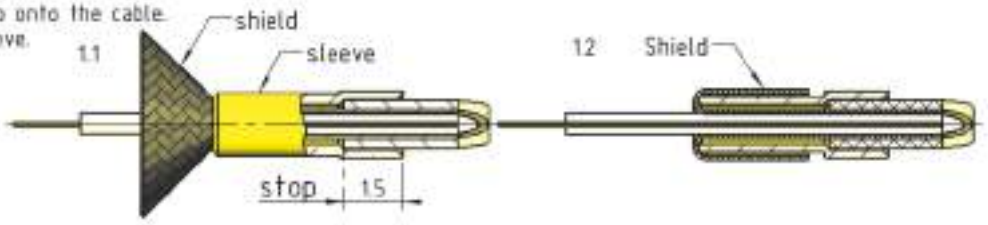

2/ - Thread the insulator.
- Solder the inner contact on the conductor.

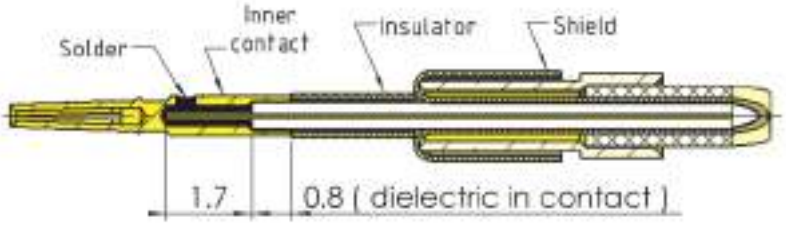

3/ - Thread to the body.
- Beware that the inner contact's hook goes entirely through the body's insulator

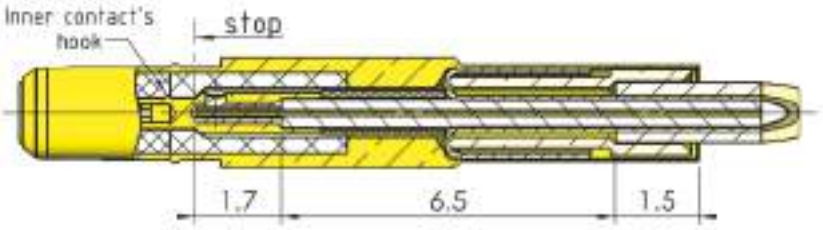

4/ CRIMP :
- Tool : DANELS HX3
- Die : C13847
- Position : 8.95 coax 22
- Hexagone : 1.9mm / plats

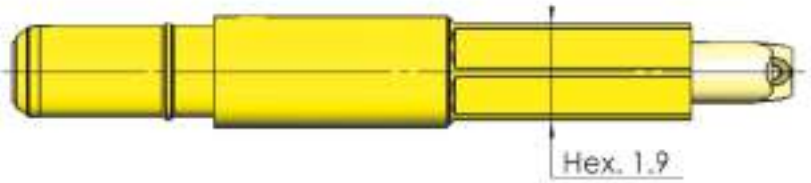

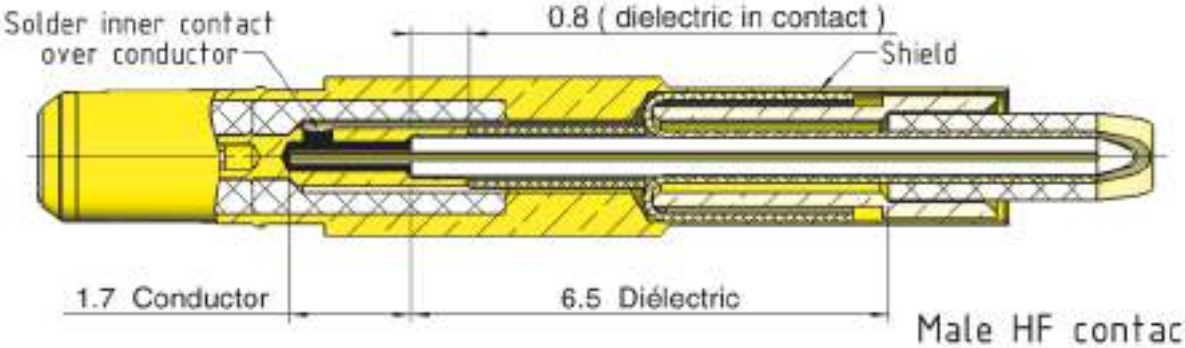

Male HF contact

Cable instructions (IC22HF02)

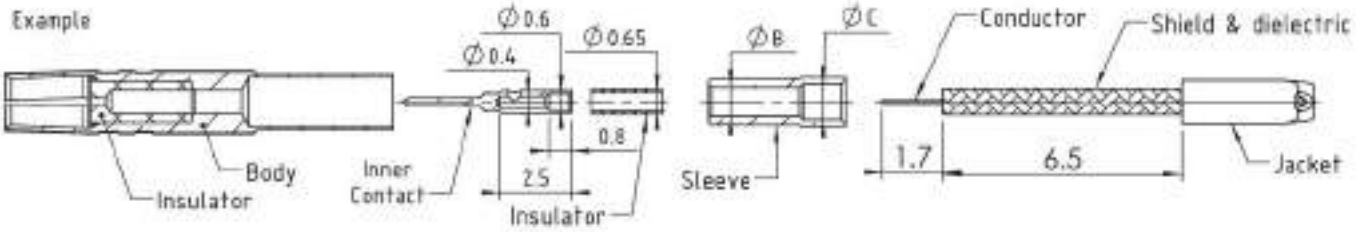

1/ 1.1 - Thread the sleeve until stop onto the cable.
1.2 - Place the shield on the sleeve.

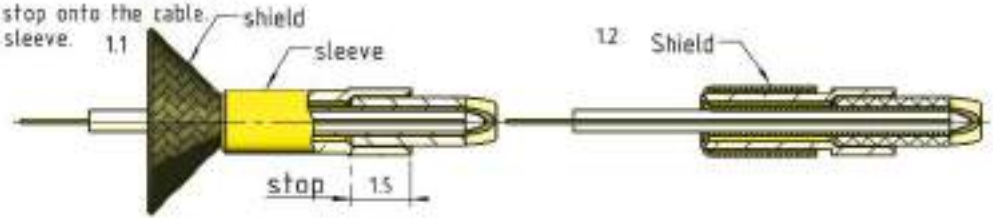

2/ - Thread the insulator.
- Solder the inner contact on the conductor.

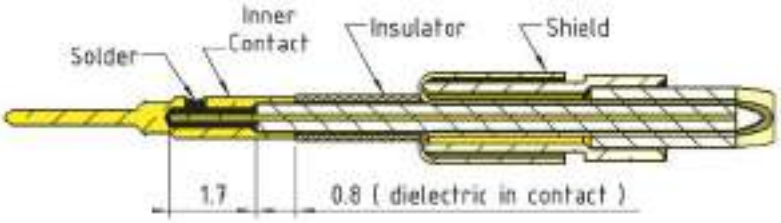

3/ - Put the contact body in the tool C16447.
- Thread to the body.
- Beware that the inner contact's hook goes entirely through the body's insulator.

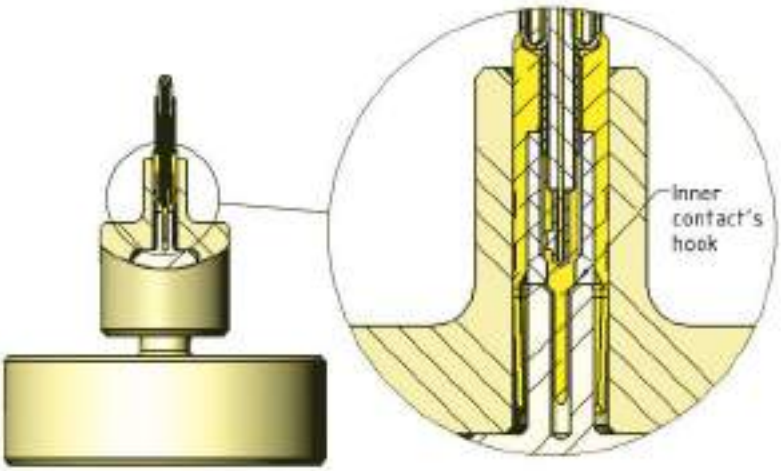

4/ CRIMP :
- Tool : DANIELS HX3
- Die : C13847
- Position : 8.95 coax 22
- Hexagone : 1.9mm / plats
- Position : 8.95mm

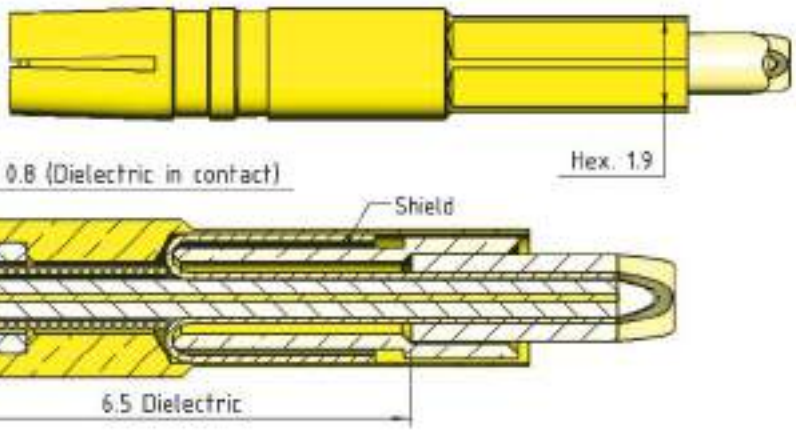

Cable instructions (IC30HF01)

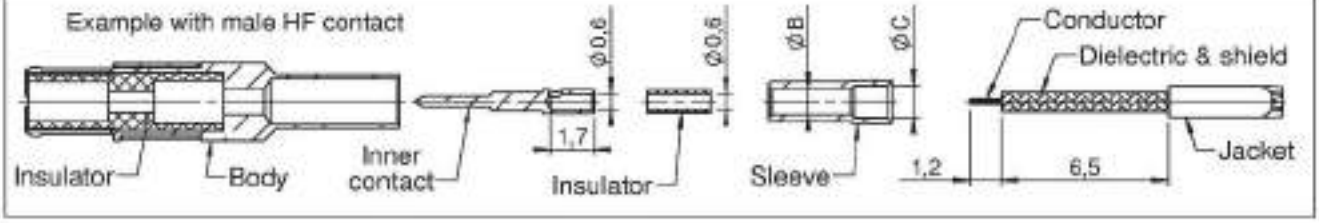

1 - Thread the sleeve until stop onto the cable
- Place the shield on the sleeve

2 - Thread the insulator
- Solder the inner contact on the conductor

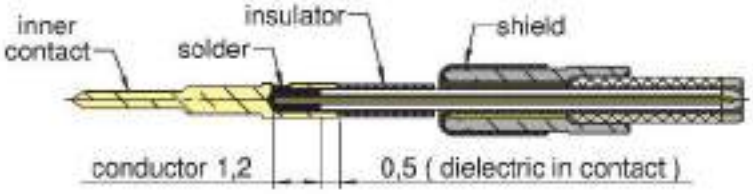

3 - Thread to the body.

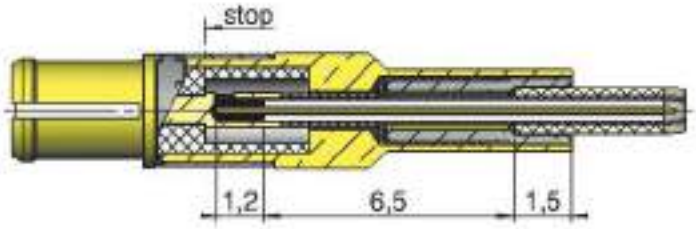

4 - CRIMP
- Tool : DANIELS HX3
- Die : C13847
- Hexagone : 1,9 mm / flat
- Position : 9,95 mm

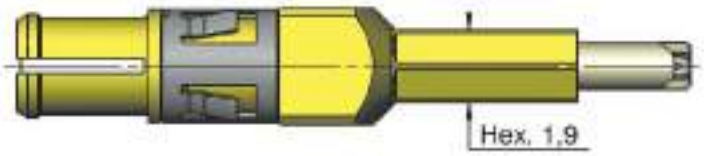

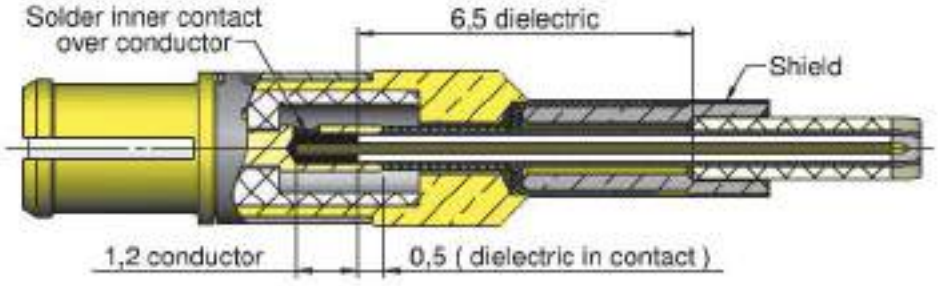

Female HF contact

	ØB	ØC	Sleeve
P/N terminal -01	1	1,25	
P/N terminal -02	0,85	1,15	

Male HF contact

Cable instructions (IC30HF02)

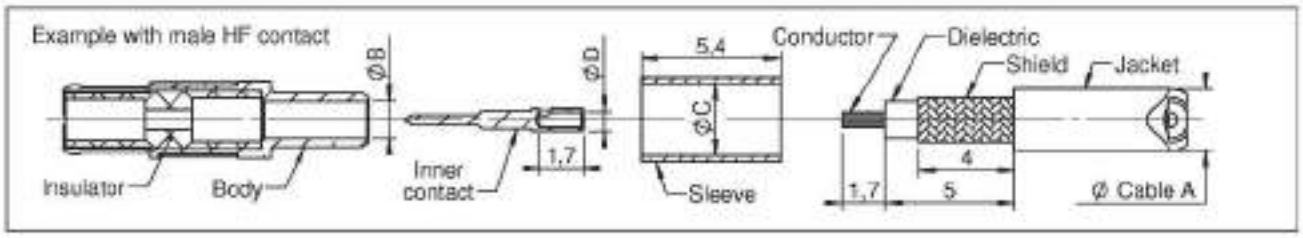

					Central crimp DANIELS MH800		Hexagonal imprint E sleeve crimp DANIELS HX3 tool				
	Cable ØA	Body ØB	Sleeve ØC	Contact ØD	Positioner K1131		Die C13847			Die C14680	
					Conductor Ø 0,3	Conductor Ø 0,5	Hex.1,9	Hex.2,4	Hex.2,8	Hex.3,25	Hex.4
30-x320-SS	2 mm	1 mm	2,2 mm	0,5 mm	Position 2 / 3	Position 3 / 4		x			
30-x320-DS	2,3 mm	1 mm	2,8 mm	0,5 mm					x		
30-x324-SS	2,4 mm	1,5 mm	2,8 mm	0,6 mm					x		
30-x326-SS	2,7 mm	1,7 mm	2,8 mm	0,6 mm					x		
30-x326-DS	3 mm	1,7 mm	3,25 mm	0,6 mm						x	

1 - Mount the inner contact on the conductor and solder or crimp.
(crimping with DANIELS MH800 positioner K1131)

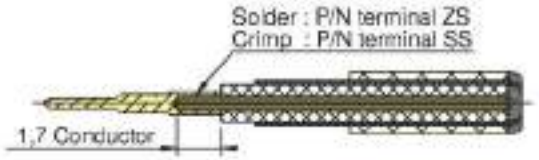

2 - Thread the sleeve onto the cable and bent the shield at 90°.

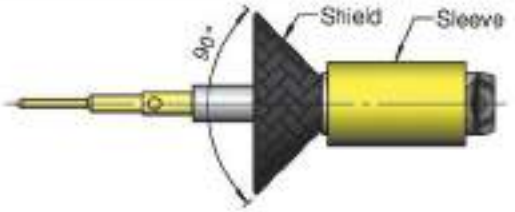

3 - Push until stop inside the body.

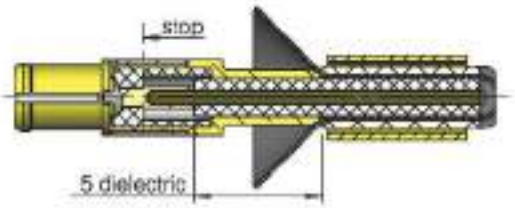

4 - Thread the sleeve until stop on the body so as to bent the shield.

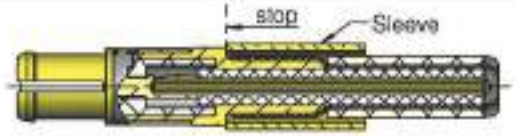

5 - Crimp the sleeve

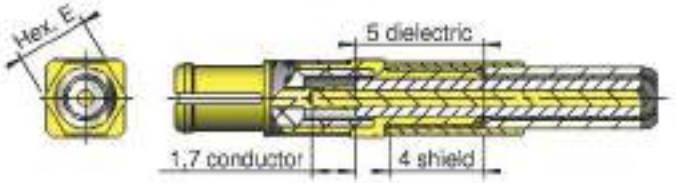

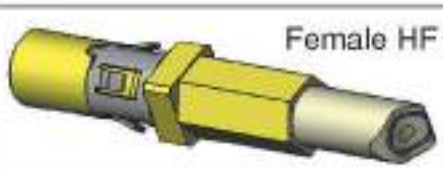

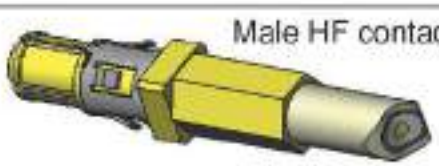

Cable instructions (IC30HF03)

Example with male HF contact

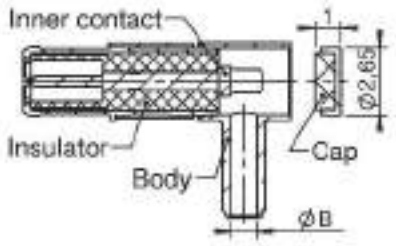

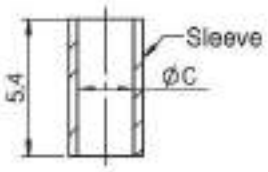

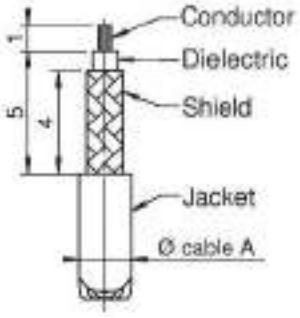

1 - Thread the sleeve on cable and bent the shield at 90°

2 - Place the inner contact until stop in the body. Insert the cable and solder the conductor onto the inner contact

3 - Thread the sleeve until stop on the body so as to bent the shield

4 - Crimp the sleeve with DANIELS HX3 tool and mount the back cap with tool P/N C14772

	Cable ØA	Body ØB	Sleeve ØC	Contact	Hexagonal imprint E sleeve crimp DANIELS HX3 tool				
					Die C13847			Die C14680	
					Hex.1,9	Hex.2,4	Hex.2,8	Hex.3,25	Hex.4
30-x412-ZS	1,2 mm	0,7 mm	1,3 mm	solder	x				
30-x420-ZS	2 mm	1 mm	2,2 mm	solder		x			
30-x420-DS	2,3 mm	1 mm	2,8 mm	solder			x		
30-x424-ZS	2,4 mm	1,5 mm	2,8 mm	solder			x		
30-x426-ZS	2,7 mm	1,7 mm	2,8 mm	solder			x		
30-x426-DS	3 mm	1,7 mm	3,25 mm	solder				x	

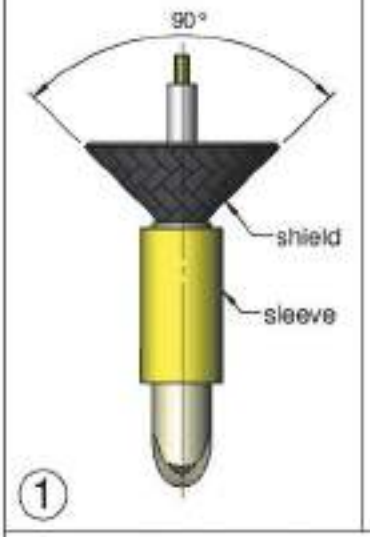

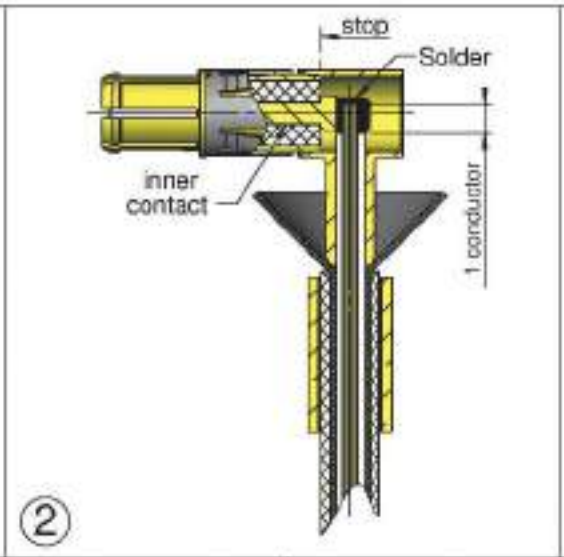

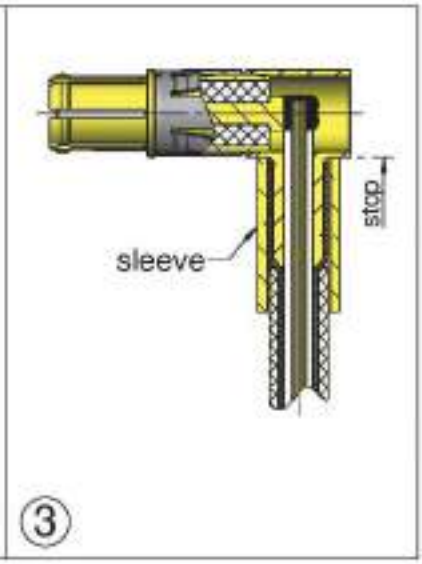

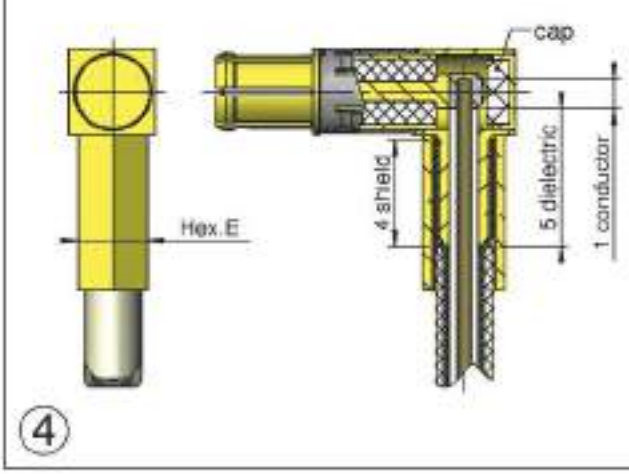

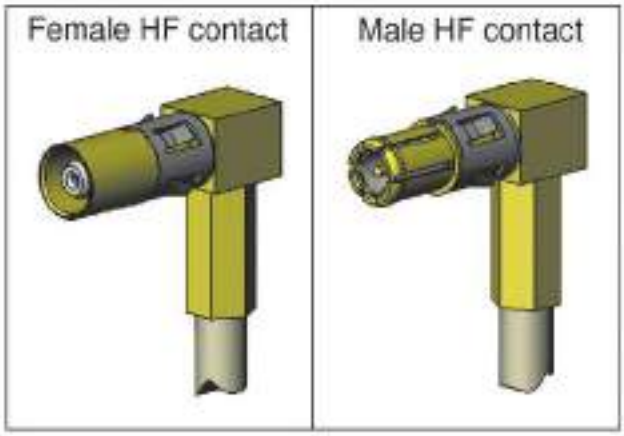

Cable instructions (IC22HP02)

Stripping

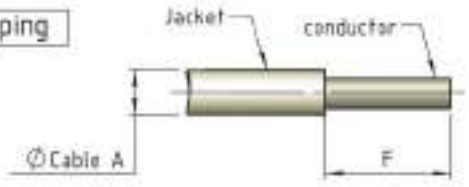

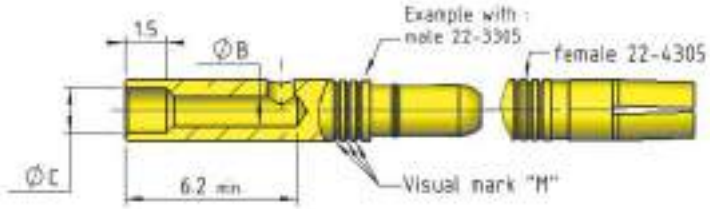

Loaded	Unloaded	Cable A AWG20	Cable A AWG18	Cable A AWG16	ØB	ØC	Length F conductor	M	Solder	Crimp by AFS Tool / Positioner	Crimp tool setting - Number selector AWG20	AWG18	AWG16
3305	22-3305	X	NA		1.1 mm	1.65 mm	4.5 mm	x3	OK	16459 / C16461	4	NA	
3308	22-3308	NA	X	NA	1.35 mm	1.85 mm		x2			NA	5	NA
3310	22-3310	X			1.7 mm	NA	6 mm	x1			4	5	6

Loaded	Unloaded	Cable A AWG20	Cable A AWG18	Cable A AWG16	ØB	ØC	Length F conductor	M	Solder	Crimp by AFS Tool / Positioner	Crimp tool setting - Number selector AWG20	AWG18	AWG16
4305	22-4305	X	NA		1.1 mm	1.65 mm	4.5 mm	x3	OK	16459 / C16461	4	NA	
4308	22-4308	NA	X	NA	1.35 mm	1.85 mm		x2			NA	5	NA
4310	22-4310	X			1.7 mm	NA	6 mm	x1			4	5	6

NA : Not Applicable

1 - Insert the cable into the contact

The conductor must be visible through the inspection window of the contact

2 - Set the hand crimp tool according to crimp barrel accomodation table above.

2.1 - Select the number selector with the selector knob (see crimp tool setting).
2.2 - Put the positioner C16461 on the hand crimp tool 16459.

3 - Insert the contact and wire assembly in the crimp guide of the hand crimp tool.

3.1 - In the crimp guide, the contact and wire assembly must be in the ends stop position.
3.2 - During crimping, keep the wire in position.
3.3 - Just one crimping operation is allowed per contact and wire assembly.

4 - Visually check crimping

4.1 - Crimping must not deform the inspection window.
4.2 - Contact must not have visible fractures or cracks.
4.3 - Contact barrel must not be deformed or bent.
4.4 - Crimping must not deform the end of the contact.

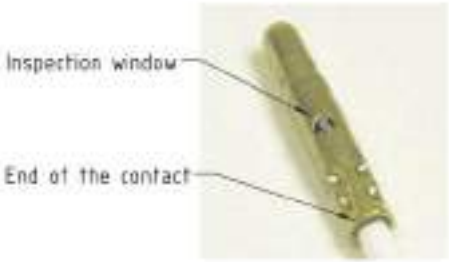

5 - Check it is firmly crimped by pulling gently

5.1 - For that purpose two (2) fingers are enough : pinch the wire and pull smoothly along the axis of the crimped contact

Cable instructions (IC30HP02)

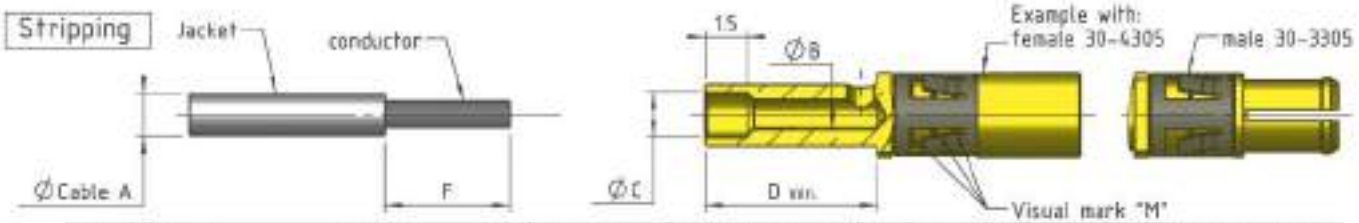

Loaded	Unloaded	Cable A AWG20	AWG18	AWG16	AWG14	AWG12	ØB	ØC	Length F conductor	Length D hole	M	Solder	Crimp by AF8 Tool / Positioner	Crimp tool setting - Number selector AWG20	AWG18	AWG16	AWG14	AWG12
3305	30-3305	X	NA				1.1 mm	1.65 mm	4.5 mm	6.2 mm	x3	OK	16459 / C16460	3	NA			
3308	30-3308	NA	X	NA			1.35 mm	1.85 mm			x2			NA	4	NA		
3310	30-3310	X		NA			1.7 mm	NA	8 mm		x1			4	4	8	NA	
3315	30-3315	NA			X	NA	2 mm				NA			NA			8	NA
3320	30-3320				NA	X	2.6 mm		8.3 mm	8.5 mm							NA	8

Loaded	Unloaded	Cable A AWG20	AWG18	AWG16	AWG14	AWG12	ØB	ØC	Length F conductor	Length D hole	M	Solder	Crimp by AF8 Tool / Positioner	Crimp tool setting - Number selector AWG20	AWG18	AWG16	AWG14	AWG12
4305	30-4305	X	NA				1.1 mm	1.65 mm	4.5 mm	6.2 mm	x3	OK	16459 / C16460	3	NA			
4308	30-4308	NA	X	NA			1.35 mm	1.85 mm			x2			NA	4	NA		
4310	30-4310	X		NA			1.7 mm	NA	8 mm		x1			4	4	8	NA	
4315	30-4315	NA			X	NA	2 mm				NA			NA			8	NA
4320	30-4320				NA	X	2.6 mm		8.3 mm	8.5 mm							NA	8

NA : Not Applicable

1 - Insert the cable into the contact

The conductor must be visible through the inspection window of the contact

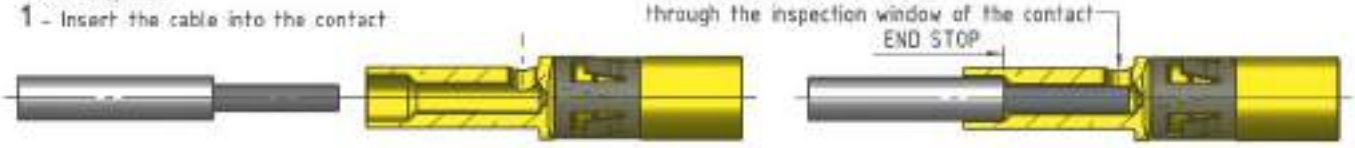

END STOP only for 30-X310, 30-X315 and 30-X320

2 - Set the hand crimp tool according to crimp barrel accomodation table above.

2.1 - Select the selector number with the selector knob (see crimp tool setting).
2.2 - Put the positioner C16460 on the hand crimp tool 16459.

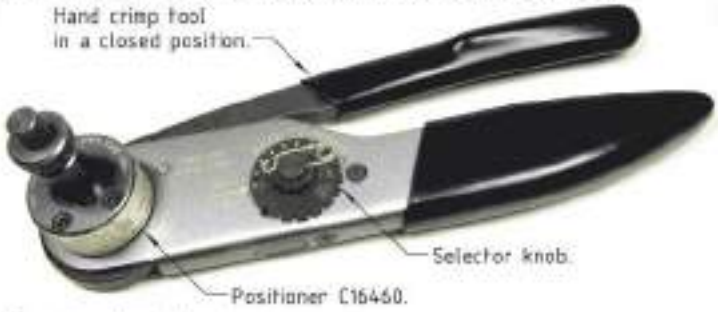

3 - Insert the contact and wire assembly in the crimp guide of the hand crimp tool.

3.1 - In the crimp guide, the contact and wire assembly must be in the end stop position.
3.2 - During crimping, keep the wire in position.
3.3 - Just one crimping operation is allowed per contact and wire assembly.

4 - visually check crimping

4.1 - Crimping must not deform the inspection window.
4.2 - Contact must not have visible fractures or cracks.
4.3 - Contact barrel must not be deformed or bent.
4.4 - Crimping must not deform the end of the contact

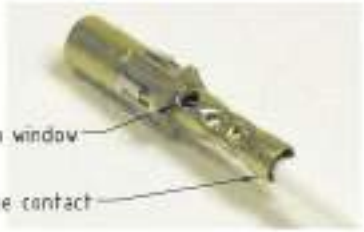

5 - Check it is firmly crimped by pulling gently

For that purpose two (2) fingers are enough : pinch the wire and pull smoothly along the axis of the crimped contact

Index

General information

CMM presentation ..... p 2
CMM specifications & dimension tables ..... p 3-4-5
Contacts information ..... p 7-11
Male and Female housings marking ..... p 12-13
Standard part numbering & product families ..... p 14-15
Custom products & innovations ..... p 125

CMM 100/200 Series p 17-25

Contact arrangements & configuration ..... p 18-19
Male connectors ..... p 20-22
Female connectors ..... p 23-25
Retention latches information ..... p 22

CMM 220 Series p 27-46

CMM LF introduction page ..... p 27
Contact arrangements & configuration ..... p 28
Male connectors with LF contacts ..... p 29-31
Female connectors with LF contacts ..... p 32-34
Mixed-Layout introduction page ..... p 35
Male connectors with Mixed-Layout ..... p 36-38
Female connectors with Mixed-Layout ..... p 39-41
Shifted polarization key position ..... p 42
Fixing hardware information ..... p 43-46

CMM 320 Series p 47-59

CMM LF introduction page ..... p 47
Contact arrangements & configuration ..... p 48
Male connectors with LF contacts ..... p 49-50
Female connectors with LF contacts ..... p 51-52
Mixed-Layout introduction page ..... p 53
Male connectors with Mixed-Layout ..... p 54-56
Female connectors with Mixed-Layout ..... p 57-59
Fixing hardware information ..... p 69-74

CMM 340 Series p 60-74

CMM 340 Mixed-Layout introduction page ..... p 60-61
Contact arrangements & configuration ..... p 62
Male connectors with Mixed-Layout ..... p 63-65
Female connectors with Mixed-Layout ..... p 66-68
Fixing hardware information ..... p 69-74

High frequency and high power contacts p 75-102

Insertion & part numbering information for HF & HP contacts series 30 ..... p 75

HF contacts series 30 ..... **p 76-86**
30-1300-xx (Male straight on PCB) ..... p 76
30-2300-xx (Female straight on PCB) ..... p 76
30-1400-xx (Male 90° PCB) ..... p 77
30-2400-xx (Female 90° PCB) ..... p 77
30-1500-CMM (Male 90° SMT without LF) ..... p 78
30-1500-12 (Male 90° SMT for CMM220) ..... p 79
30-1500-12 (Male 90° SMT for CMM320) ..... p 80
30-1600 (Male straight SMT for CMM220) ..... p 81
30-2600 (Female straight SMT for CMM220) ..... p 81
30-1312-ZS (Male straight crimp on cable) ..... p 82
30-2312-ZS (Female straight crimp on cable) ..... p 82
30-13xx-SS / ZS (Male straight crimp on cable) ..... p 83
30-23xx-SS / ZS (Female straight crimp on cable) ..... p 83
30-14xx-ZS (Male 90° crimp on cable) ..... p 84
30-24xx-ZS (Female 90° crimp on cable) ..... p 84
30-13xx-ZZ (Male straight on semi-rigid cable ..... p 85
30-23xx-ZZ (Female straight on semi-rigid cable) ..... p 85
30-14xx-ZZ (Male 90° on semi-rigid cable) ..... p 86
30-24xx-ZZ (Female 90° on semi-rigid cable) ..... p 86

HP contacts series 30 ..... **p 87-93**
30-3300-xx (Male straight on PCB) ..... p 87
30-4300-xx (Female straight on PCB) ..... p 87
30-3400-xx (Male 90°) ..... p 88
30-4400-xx (Female 90°) ..... p 88
30-3500 (Male 90° SMT) ..... p 89
30-4500 (Female 90° SMT) ..... p 89
30-3600 (Male straight SMT) ..... p 90
30-4600 (Female straight SMT) ..... p 90
30-3500-CMM (Male 90° SMT Card Edge) ..... p 91
30-3500-12 (Male 90° SMT Card Edge CMM220) ..... p 92
30-3500-12 (Male 90° SMT Card Edge CMM320) ..... p 93
30-33xx (Male straight on cable) ..... p 94
30-43xx (Female straight on cable) ..... p 94

Insertion & part numbering information for HF & HP contacts series 22 ..... **p 95**

HF contacts series 22 ..... **p 96-99**
22-1300-xx (Male straight on PCB) ..... p 96
22-2300-xx (Female straight on PCB) ..... p 96
22-1400-xx (Male 90° PCB) ..... p 97
22-2400-xx (Female 90° PCB) ..... p 97
22-1312-ZS-xx (Male straight to crimp on cable) ..... p 98
22-2312-ZS-xx (Female straight to crimp on cable) p 98
22-1320-ZZ (Male straight on cable) ..... p 99
22-2320-ZZ (Female straight on cable) ..... p 99

HP contacts series 22 ..... **p 100-102**
22-3300-xx (Male straight on PCB) ..... p 100
22-4300-xx (Female straight on PCB) ..... p 100
22-3400-xx (Male 90° on PCB) ..... p 101
22-4400-xx (Female 90° on PCB) ..... p 101
22-33xx (Male straight on cable) ..... p 102
22-43xx (Female straight on cable) ..... p 102

Tools and accessories p 103-112

Cable instructions & assembly p 113-122

Index p 123

Notes p 124

Notes

Manufacturer and designer of innovative interconnect solutions

MICRO-D MIX™ DMM SERIES MICRO-CONNECTORS

2mm pitch high density robust metal shielded micro connector
Self cabling connector
Simple and easy to design-in
New alternative under MIL-DTL-83513G or MIL-DTL-55302F test routine
Very flexible custom design (fixing hardware, contacts…)

OMM SERIES MICRO-CIRCULAR CONNECTORS

High density of contacts in smallest circular connector shape
Space saving feature
Security of connection
Light weight
Lockable captive fixing hardware

MICROFLEX HARNESS SOLUTION

Low weight: save up to -30% vs. bulky cable
Smaller space-factor
2 in 1 technology with CMM & CRIMPFLEX
Avionic & aerospace MIL comply
High quality of crimp (gaz tie)
High productivity: 2 to 30 contacts in 1 crimp

4D-FLOATING CONNECTORS

4D tolerance absorption: 4D = 3 axial movements + 1 rotation
High efficiency “Bone design” (round shape and 4 spring-lips contact)
Complies with MIL-DTL-55302F
Auto alignment feature
Adaptable to customer requests

CUSTOM PRODUCTS

You can rely on our R&D department know-how and long experience.
Our permanent innovation was recognized and labelized as "highly Innovative" by the European Union
Our in-house production and assembly capacity offers you the possibility to create customized products : stamping and moulding, micro-screw machining, laser cut, CNC, specific machinery development, clean room, measure and test lab.
Fully integrated industrial company, Nicomatic can reduce your risks, can secure your development and achieve the solution that will make the difference on the market.

Date of issue : May 2011
Catalogue reference : C.CMM.1000/GB

NICOMATIC maintains a policy of ongoing development and improvement. It therefore reserves the right to change design, dimensions and specifications without notice. All information stated inside this catalogue is not contractual and subject to change (eg. standard connector configurations).

Copyright 2011 by NICOMATIC (All Rights Reserved).

HEADQUARTER

FRANCE
T:+33 (0)4 50 36 13 85
france@nicomatic.com

MEMBER OF
Gifas - Eden
Aerospace cluster

SUBSIDIARIES

UNITED STATES
T:+1 21 54 44 95 80
usa@nicomatic.com

CHINA
T:+86 (0)22 23 85 88 36
china@nicomatic.com

INDIA
T: +91 80 421 315 74
india@nicomatic.com

UNITED KINGDOM
T: +44 (0) 11 83 80 10 33
uk@nicomatic.com

GERMANY
T: +49 (0)33 203 878 801
germany@nicomatic.com

TURKEY
T: +90 (0) 312 504 37 29
turkey@nicomatic.com

SOUTH KOREA
T: +82 (0)2 553 6822
korea@nicomatic.com

JAPAN
T: +81 (0)80 2138 0909
japan@nicomatic.com

SINGAPORE
T: +65 62 62 12 80
singapore@nicomatic.com

CANADA
T: +41 (0) 438 885 3395
canada@nicomatic.com

TAIWAN
T: +886 (0)2 2311 2667
taiwan@nicomatic.com

CAREER

COME & JOIN US
- Improving technology
- Diversity & gender equality
- We promote initiative & responsibility

READY TO JOIN OUR TEAM?
recruitment@nicomatic.com

NICOMATIC

WEBSITE
nicomatic.com